5 - Volt Fixed Voltage Regulators

Description

The SG109 is a self-contained 5V regulator designed to provide local regulation at currents up to 1A for digital logic cards. This device is available in the hermetic TO-3 and TO-39 packages.

The SG109's design has protective features principally current limiting to control the peak currents and thermal shutdown to protect against excessive power dissipation. These features make the device blowout proof.

With the only added component being an optional input bypass capacitor, this regulator becomes extremely easy to apply. Utilizing an improved Bandgap reference design, problems that are normally associated with the Zener diode references, such as, drift in output voltage and large changes in the line and load regulation have been eliminated.

Features

- Fully Compatible with TTL and DTL
- Output Current in Excess of 1A
- Internal Thermal Overload Protection
- No Additional External Components
- Bandgap Reference Voltage
- Foldback Current Limiting

High Reliability Features

Following are the high reliability features of SG109:

- Available to MIL-STD-883, ¶ 1.2.1
- MSC-AMS level "S" processing available
- MIL-M38510/10701BXA SG109T-JAN

Block Diagram

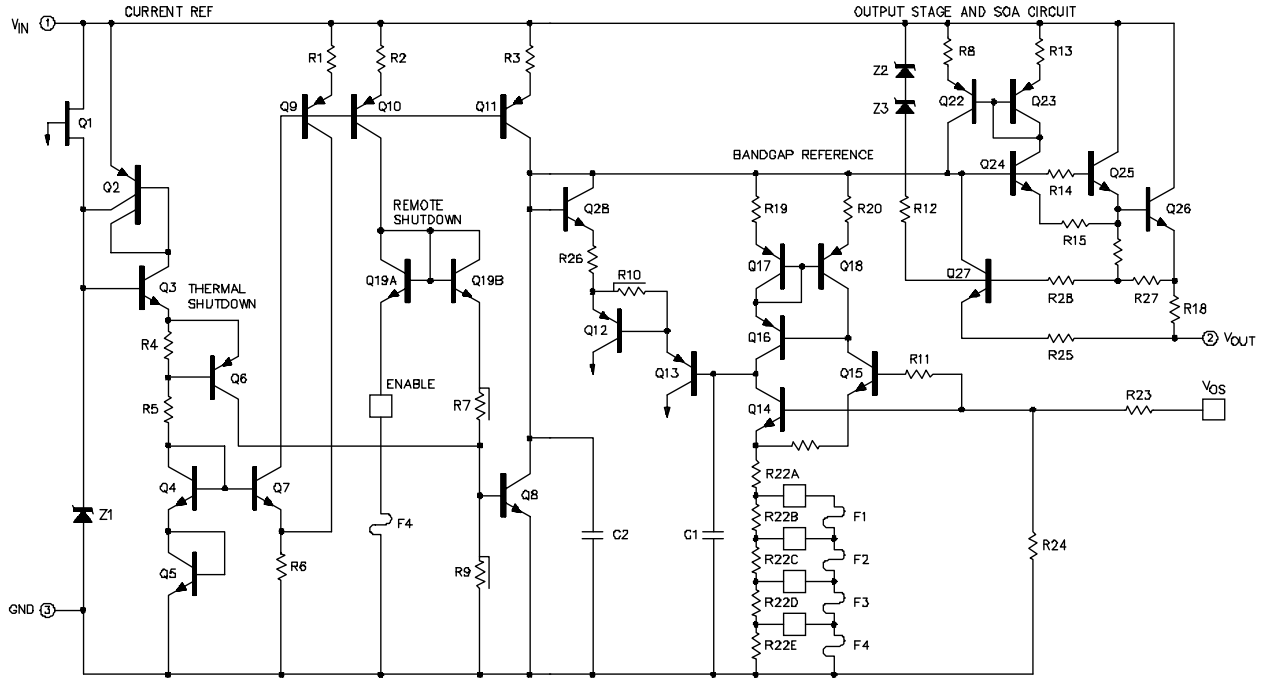

Figure 1 · Block Diagram

Absolute Maximum Ratings (Note 1)

Input Voltage 35V
Power Dissipation ..... Internally Limited
Storage Temperature Range ..... -65°C to 150°C

Operating Junction Temperature
Hermetic (K and T Packages)..... 150°C
Lead Temperature (Soldering, 10 Seconds) ..... 300°C

Note 1. Exceeding these ratings could cause damage to the device.

Thermal Data

K Package:
Thermal Resistance - Junction to Case, θ_{JC} ..... 3.0°C/W
Thermal Resistance - Junction to Ambient, θ_{JA} .... 35°C/W

T Package:
Thermal Resistance-Junction to Case, θ_{JC} ..... 15°C/W
Thermal Resistance-Junction to Ambient, θ_{JA} ..... 120°C/W

Note A. Junction Temperature Calculation: $T_J = T_A + (P_D \times \theta_{JA})$.

Note B. The above numbers for θ_{JC} are maximums for the limiting thermal resistance of the package in a standard mounting configuration. The θ_{JA} numbers are meant to be guidelines for the thermal performance of the device/pc-board system. All of the above assume no ambient airflow.

Recommended Operating Conditions (Note 2)

Input Voltage Range ..... 7.0V to 25V

Note 2. Range over which the device is functional.

Operating Junction Temperature Range

SG109 ..... -55°C to 150°C

Electrical Characteristics

(Unless otherwise specified, these specifications apply over the operating ambient temperatures for SG109 with -55°C ≤ T_A ≤ 150°C and for V_{IN} = 10V, I_{OUT} = 500mA (K-package) and I = 100mA (T-package). Low duty cycle pulse testing techniques are used which maintains junction and case temperatures equal to the ambient temperature.)

Parameter	Test Conditions	SG109			Units
		Min.	Typ.	Max.	
Output Voltage	T_A = 25°C	4.7	5.05	5.3	V
Line Regulation	V_{IN} = 7.1V to 25V, T_A = 25°C		4.0	50	mV
Load Regulation	T_A = 25°C				
	K-Package: I_{OUT} = 5mA to 1.5A		15	100	mV
	T-package: I_{OUT} =5mA to 500mA		15	50	mV
Total Output Voltage Tolerance	V_{IN}= 7.4V to 25V				
	K-Package: I_{OUT} = 5mA to 1.0A, P ≤ 20W	4.6	5.0	5.4	V
	T-package: I_{OUT} =5mA to 200mA, P ≤ 2W	4.6	5.0	5.4	
Quiescent Current Quiescent	V_{IN} = 7.4V to 25V			10	mA
Current Change	With Line : V_{IN} = 7.4V to 25V			0.5	mA
	With Load: K-Package: I_{OUT} = 5mA to 1.0A			0.8	mA
	T-package: I_{OUT} =5mA to 200mA			0.8	mA
Output Noise Voltage	f = 10Hz to 100kHz, T_A = 25°C		40		µV
Long Term Stability			10		mV
Ripple Rejection	T_A = 25°C	50			dB

Application Circuits

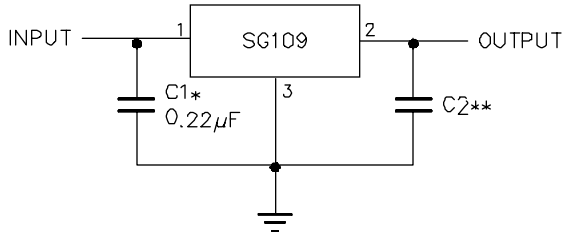

* Required if regulator is in appreciable distance from power supply filter.

** Although no output capacitor is needed for stability it does improve transient response.

Figure 2 · Fixed 5V Regulator

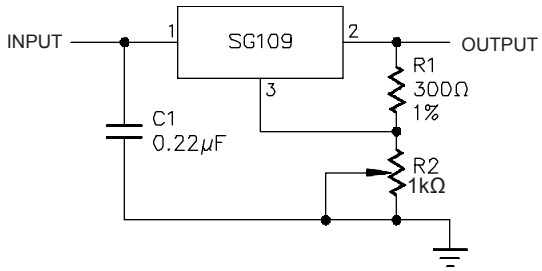

Figure 3 · Adjustable Output Regulator

Connection Diagrams and Ordering Information (See Notes Below)

Package	Part No.	Ambient Temperature Range	Connection Diagram
3-TERMINAL TO-3 METAL CAN K-PACKAGE	SG109K-883B SG109K	-55°C to 125°C -55°C to 125°C	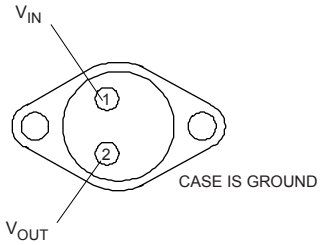
3-PIN TO-39 METAL CAN T-PACKAGE	SG109T-883B SG109T-JAN SG109T	-55°C to 125°C -55°C to 125°C -55°C to 125°C	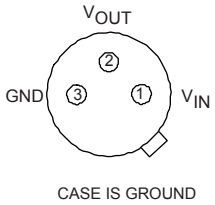

Note 1. Contact factory for JAN product availability.
2. All parts are viewed from the top.
3. Packages use Pb37/Sn63 hot solder lead finish, contact factory for availability of RoHS versions.

Package Outline Dimensions

Controlling dimensions are in inches, metric equivalents are shown for general information.

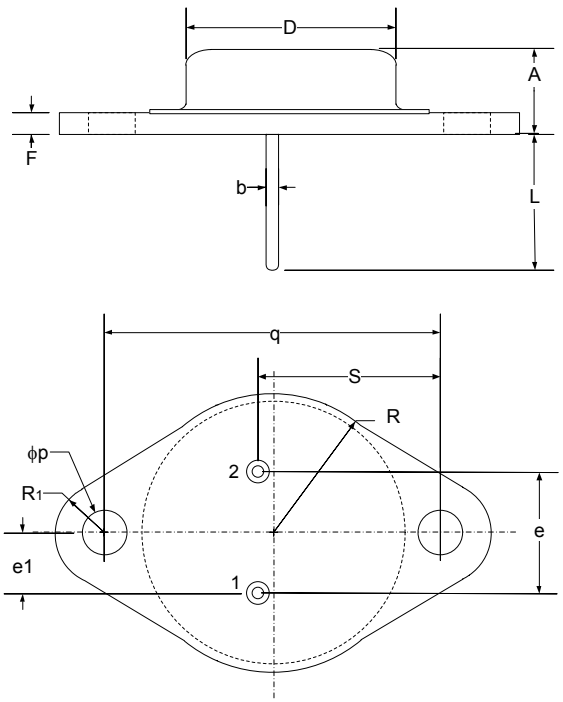

DIM	MILLIMETERS		INCHES	
	MIN	MAX	MIN	MAX
A	6.86	7.62	0.270	0.300
q	29.90	30.40	1.177	1.197
b	0.97	1.09	0.038	0.043
D	19.43	19.68	0.765	0.775
S	16.64	17.14	0.655	0.675
e	10.67	11.18	0.420	0.440
e1	5.21	5.72	0.205	0.225
F	1.52	2.03	0.060	0.080
ϕp	3.84	4.09	0.151	0.161
L	10.79	12.19	0.425	0.480
R1	3.33	4.78	0.131	0.188
R	12.57	13.34	0.495	0.525

Note:

Dimensions do not include protrusions; these shall not exceed 0.155mm (.006") on any side. Lead dimension shall not include solder coverage.

Figure 4 · K 3-Pin Metal Can TO-3 Package Dimensions

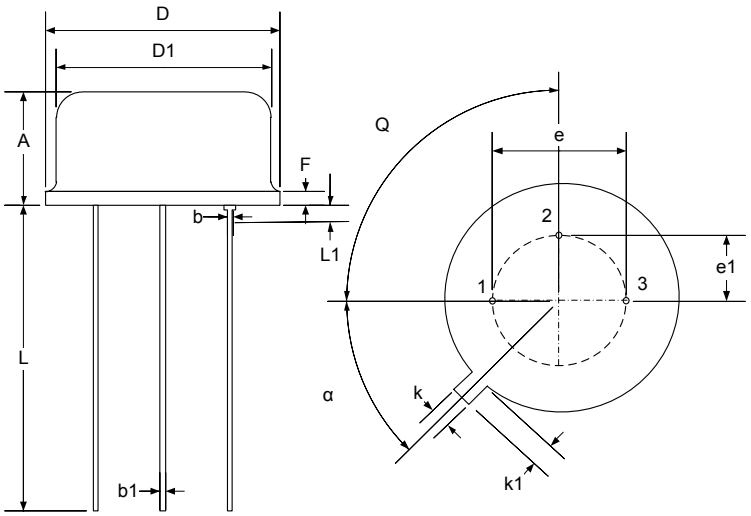

DIM	MILLIMETERS		INCHES	
	MIN	MAX	MIN	MAX
A	4.19	4.70	0.165	0.185
b	0.41	0.48	0.016	0.019
b1	0.41	0.53	0.016	0.021
D	8.89	9.40	0.350	0.370
D1	8.13	8.51	0.320	0.335
e	5.08 BSC		0.200 BSC	
e1	2.54 TYP		0.100 TYP	
F	-	1.02	-	0.040
k	0.71	0.86	0.028	0.034
k1	0.74	1.14	0.029	0.045
L	12.70	14.48	0.500	0.570
L1	-	1.27	-	0.050
Q	90° TYP		90° TYP	
α	45° TYP		45° TYP	

Note:

Dimensions do not include protrusions; these shall not exceed 0.155mm (.006") on any side. Lead dimension shall not include solder coverage.

Figure 5 · T 3-Pin Metal Can TO-39 Package Dimensions

Microsemi Corporation (Nasdaq: MSCC) offers a comprehensive portfolio of semiconductor and system solutions for communications, defense & security, aerospace and industrial markets. Products include high-performance and radiation-hardened analog mixed-signal integrated circuits, FPGAs, SoCs and ASICs; power management products; timing and synchronization devices and precise time solutions, setting the world's standard for time; voice processing devices; RF solutions; discrete components; security technologies and scalable anti-tamper products; Power-over-Ethernet ICs and midspans; as well as custom design capabilities and services. Microsemi is headquartered in Aliso Viejo, Calif., and has approximately 3,400 employees globally. Learn more at **www.microsemi.com**.

Microsemi Corporate Headquarters
One Enterprise, Aliso Viejo,
CA 92656 USA

Within the USA: +1 (800) 713-4113
Outside the USA: +1 (949) 380-6100
Sales: +1 (949) 380-6136
Fax: +1 (949) 215-4996

E-mail: sales.support@microsemi.com

SG109.1.2/02.15