THIS DRAWING IS UNPUBLISHED. RELEASED FOR PUBLICATION -.- .
© COPYRIGHT - BY TYCO ELECTRONICS CORPORATION. ALL RIGHTS RESERVED.

LOC	DIST
CM	54

REVISIONS

P	LTR	DESCRIPTION	DATE	DWN	APVD
	01	ECO-06-013032	12JUN06	BSV	DB

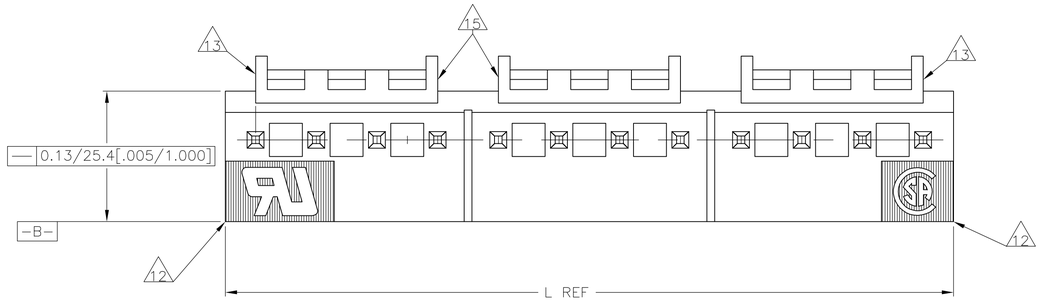

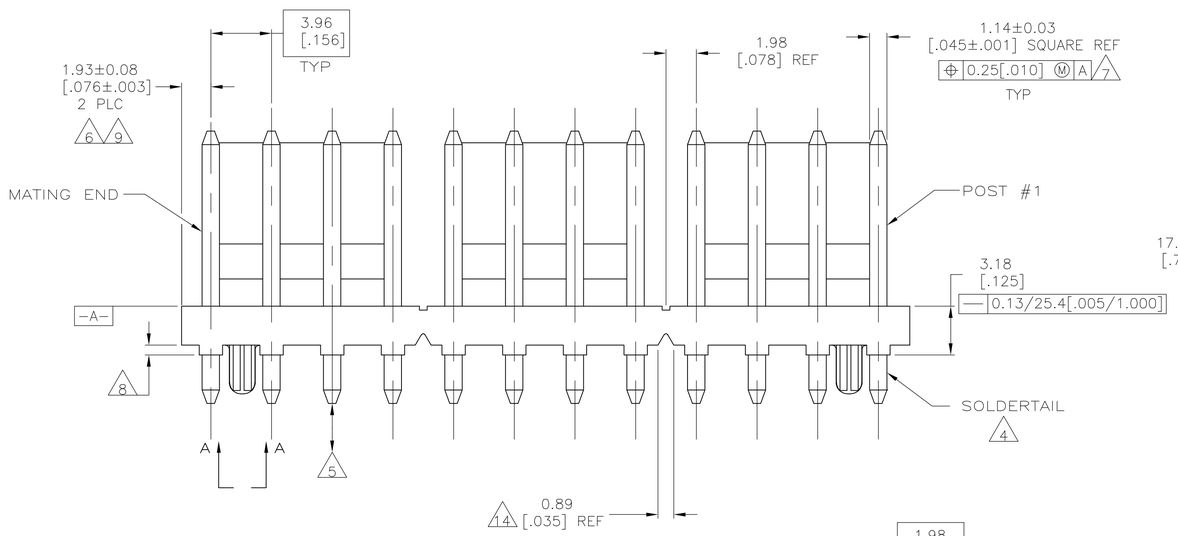

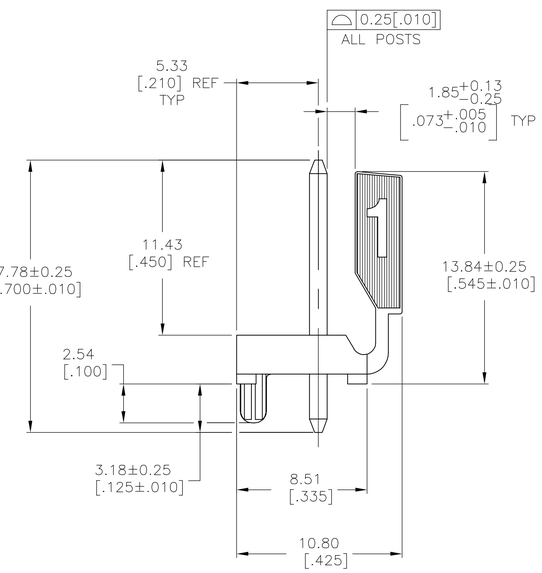

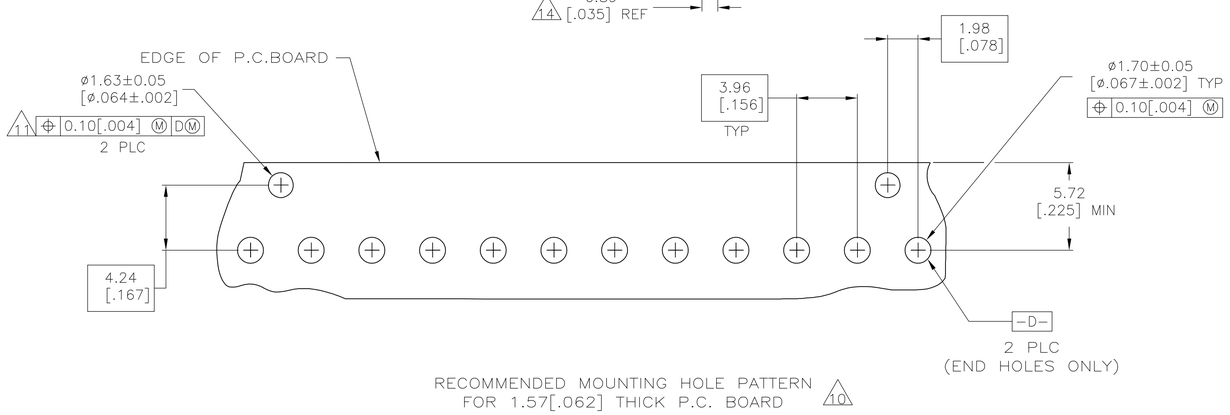

RECOMMENDED MOUNTING HOLE PATTERN
FOR 1.57[.062] THICK P.C. BOARD 10

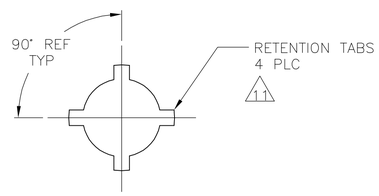

VIEW A-A
SCALE 10:1

1. MATERIAL
HOUSING: THERMOPLASTIC POLYAMIDE,GLASS FILLED,UL94V-O.
POST: COPPER ALLOY

2. FINISH
HOUSING: NATURAL
POST: BRIGHT TIN-LEAD (93/7) PLATE OR MATTE TIN PLATE 0.0038[.000150]-0.0088[.000350] THICK OVER NICKEL UNDERPLATE, 0.0013[.000050] MIN THICK.

4. POST SOLDERTAILS COMPLY WITH AMP SOLDERABILITY SPEC 109-11-2.

5. POST WITHSTANDS 13.34N (3 LB) MIN AXIAL FORCE IN EITHER DIRECTION WITHOUT DISLODGING.

6. APPLIES AT -A- .

7. APPLIES WHEN THE HEADER IS STRAIGHT.

8. PLASTIC PROJECTIONS PERMITTED IN THIS ZONE.

9. COORDINATE DIMENSIONS APPLIES FROM THE CENTER OF THE ACTUAL FEATURE.

10. SOLDER SIDE OF BOARD IS SHOWN.

11. THE RENTENTION TABS PROVIDE A ONE-TIME INTERFERENCE FIT IN THE 1.63[.064] DIAMETER BOARD HOLE FOR HEADER ASSEMBLY RETENTION DURING SOLDERING. FOUR TABS PER PEG, TWO PEGS PER HEADER ASSEMBLY.

12. DIMENSIONS IN BRACKETS ARE IN INCHES.

13. EDGE OF POLARIZING LOCK WALL TO BE IN LINE WITH CENTERLINE OF ADJACENT POST WITHIN ±0.13 [.005].

14. NOTCH SHOWN MAY OR MAY NOT APPEAR.

FINISH	L	NO. OF POSN	PART NO.
TIN	47.42 [1.867]	12	4-647615-2
TIN-LEAD	47.42 [1.867]	12	1-647615-2

METRIC

THIS DRAWING IS A CONTROLLED DOCUMENT.

DIMENSIONS: mm [INCHES]

TOLERANCES UNLESS OTHERWISE SPECIFIED:
0 PLC ± -
1 PLC ± -
2 PLC ± 0.13[.005]
3 PLC ± -
4 PLC ± -
ANGLES ± 1°

MATERIAL 1
FINISH 2

DWN B. LEWIS 13AUG90
CHK R. SWING 13AUG90
APVD E.W. BEILES 14AUG90

PRODUCT SPEC —
APPLICATION SPEC —
WEIGHT —

tyco Electronics
Tyco Electronics Corporation
Harrisburg, Pa 17105-3608

NAME
MTA-156 HEADER ASSEMBLY, POLARIZED LOCK, STRAIGHT .045 SQUARE POST, TIN-LEAD PLATED W/RETENTION PEGS

SIZE	CAGE CODE	DRAWING NO	RESTRICTED TO
A1	00779	C-647615	—

CUSTOMER DRAWING
SCALE 5:1 SHEET 1 OF 1 REV 01