Technical Data Sheet		Rosenberger
7-16	Panel Jack	**60K442-272N1**

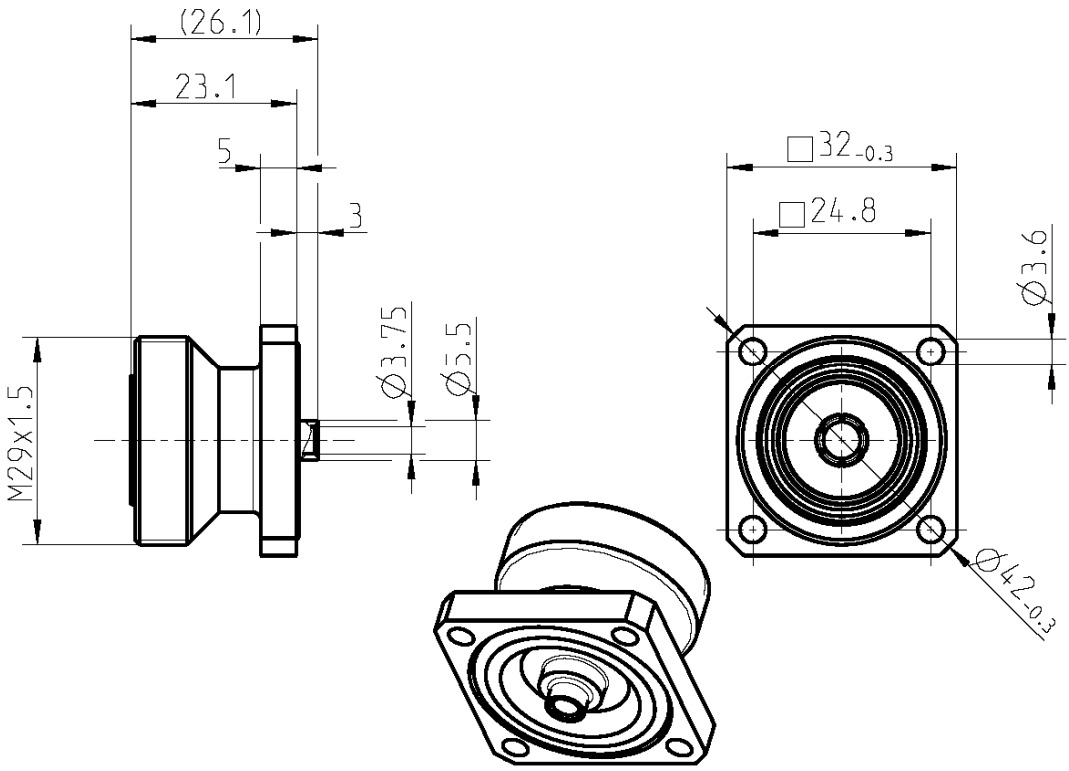

All dimensions are in mm; tolerances according to ISO 2768 m-H

Interface

According to	IEC 61169-4, EN 122190, DIN 47223

Documents

Assembly instruction	60 S20
Panel piercing	B 46b

Material and plating

Connector parts	**Material**	**Plating**
Center contact	Spring bronze	Silver, 3-6 µm
Outer contact	Brass	Flash white bronze over silver(e.g. Optargen®)
Dielectric	PTFE	

Dieses Dokument ist urheberrechtlich geschützt ● This document is protected by copyright ● Rosenberger Hochfrequenztechnik GmbH & Co. KG

Rosenberger Hochfrequenztechnik GmbH & Co. KG
P.O.Box 1260 D-84526 Tittmoning Germany
www.rosenberger.de

Tel. : +49 8684 18-0
Email : info@rosenberger.de

Electrical data

Impedance	50 Ω
Frequency	DC to 7.5 GHz
Return loss	≥ 35 dB, DC to 3.0 GHz
Insertion loss	≤ 0.05 dB
Insulation resistance	≥ 10 GΩ
Center contact resistance	≤ 0.4 mΩ
Outer contact resistance	≤ 1.5 mΩ
Working voltage (at sea level)	500 V rms
Power handling (at 20 °C, sea level, VSWR 1.0)	1800 W @ 1 GHz 800 W @ 4 GHz
RF-leakage	≥ 128 dB @ DC to 1 GHz
Intermodulation (3rd order)	≥ 160 dBc (2 x 43 dBm)

Limitations are possible due to the used cable type

Mechanical data

Mating cycles	≥ 500
Center contact captivation: axial	≥ 200 N
radial	≥ 2 Ncm
Coupling torque (recommended)	25 to 30 Nm
Proof torque	≤ 35 Nm

Environmental data

Temperature range	-45 °C to +85 °C
Rapid change of temperature	DIN EN 122190, Sub-clause 4.6.7
Corrosion resistance	DIN EN 122190, Sub-clause 4.6.10
Vibration	DIN EN 122190, Sub-clause 4.6.3
Climatic category	DIN EN 122190, Sub-clause 4.6.5 (45/85/56)
Damp heat	DIN EN 122190, Sub-clause 4.6.6
Degree of protection (mated pair)	IEC 60529, IP68 2.5 bar (assembled in housing)
RoHS	compliant

Tooling

N/A

Suitable cables

UT 141

Weight

Weight	52.5 g

While the information has been carefully compiled to the best of our knowledge, nothing is intended as representation or warranty on our part and no statement herein shall be construed as recommendation to infringe existing patents. In the effort to improve our products, we reserve the right to make changes judged to be necessary.

Draft	Date	Approved	Date	Rev.	Engineering change number	Name	Date
Christian Janßen	05.12.12	J_Gramsamer	07.04.15	c00	15-0397	J_Krautenb.	07.04.15

Rosenberger Hochfrequenztechnik GmbH & Co. KG
P.O.Box 1260 D-84526 Tittmoning Germany
www.rosenberger.de

Tel. : +49 8684 18-0
Email : info@rosenberger.de

Dieses Dokument ist urheberrechtlich geschützt ● This document is protected by copyright ● Rosenberger Hochfrequenztechnik GmbH & Co. KG