MICRO SWITCH
A DIVISION OF MINNEAPOLIS-HONEYWELL REGULATOR COMPANY
FREEPORT, ILLINOIS
FED. MFR. CODE 91929

ASSEMBLY- TOGGL SWITCH

CATALOG LISTING
115AT24

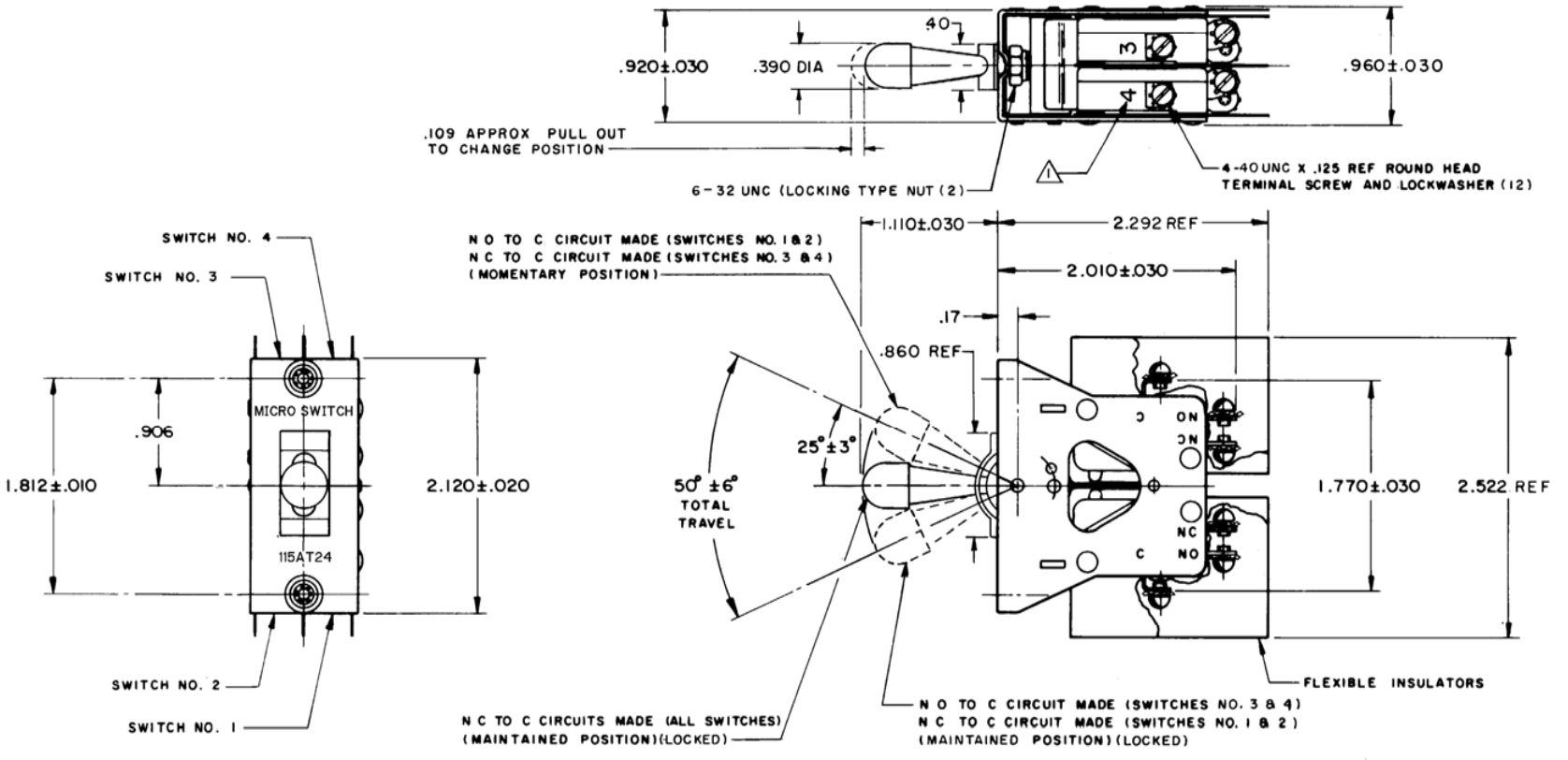

NOTES
1 - BASIC SWITCH NO. MARKED ON EACH BASIC SWITCH
2 - UNIT INCLUDES CAT. LIST. V3-1 (4) BASIC SWITCHES
3 - SWITCHES DO NOT NECESSARILY OPERATE SIMILTANEOUSLY

THIS DRAWING COVERS A PROPRIETARY ITEM AND IS THE PROPERTY OF MICRO SWITCH, A DIVISION OF MINNEAPOLIS-HONEYWELL REGULATOR CO. THIS DRAWING IS NOT TO BE COPIED OR USED WITHOUT THE APPROVAL OF MICRO SWITCH.

CHARACTERISTICS	ELECTRICAL DATA	SCALE FULL
	CONTACT ARRANGEMENT S P D T (4)	DO NOT SCALE PRINT
	15 A-1/3 HP-125 OR 250 VAC 1/2 A-125 VDC; 1/4 A-250 VDC	UNLESS OTHERWISE SPECIFIED DIMENSIONS ARE IN INCHES
		TOLERANCES ARE: ONE PLACE (.0) ±.030; TWO PLACE (.00) ±.015; THREE PLACE (.000) ±.005; ANGLES ±
		WEIGHT

DRAWN	MBF	25 SEP 63	
CHECK			
DRAWN	PAW	25 SEPT 63	
CHECK			
DRAWN	BRT	25 SEPT 63	
CHECK			