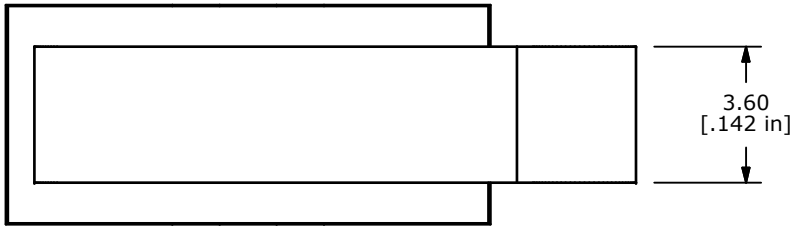

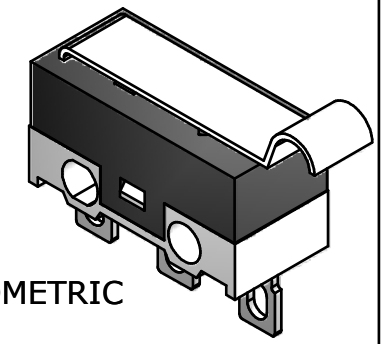

ISOMETRIC

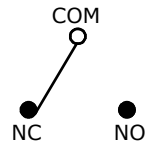

CIRCUIT: SPDT

O.P. (MM)	P.T. (MM)
10.8 ± 0.8	2.0 MAX.

O.P. = OPERATING POINT
P.T. = PRE-TRAVEL

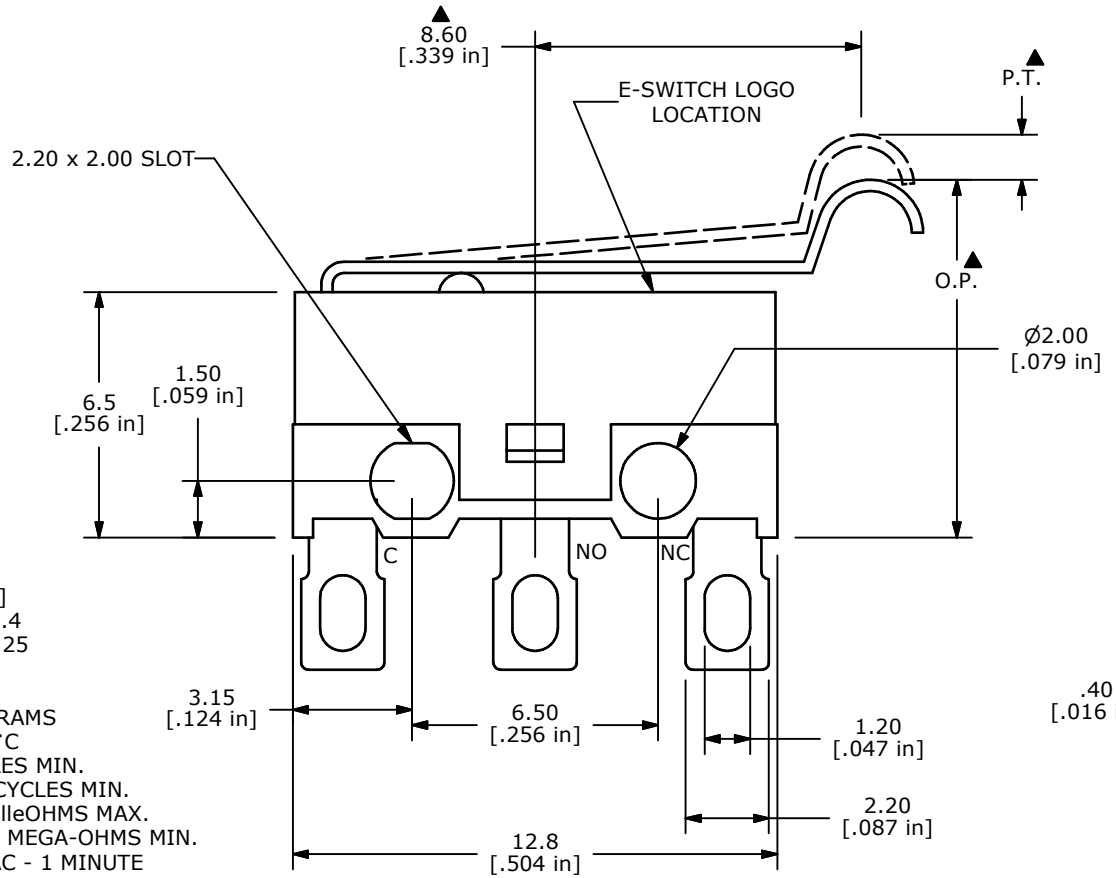

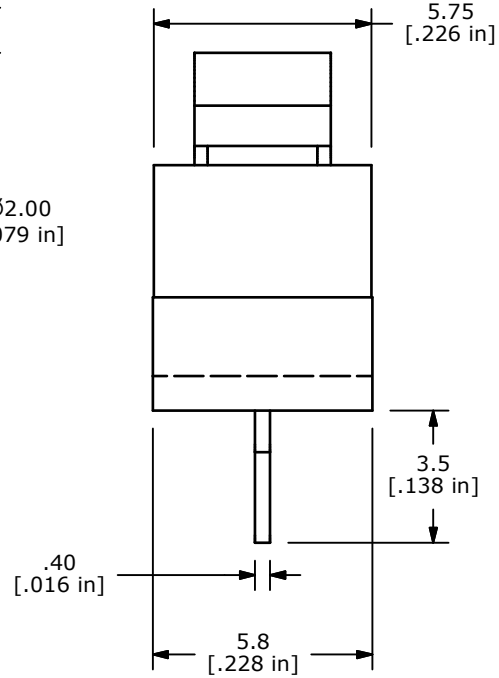

NOTES:
1. ALL DIMENSIONS IN MM [INCH]
2. GENERAL TOLERANCE: X.X=± 0.4
   X.XX=± 0.25
▲ 3. RATING: 3A @ 125 VAC
   1.5A @ 250VAC UL
▲ 4. OPERATING FORCE: 35 ± 10 GRAMS
5. OPERATING TEMP: -25˚C TO 75˚C
6. ELECTRICAL LIFE: 10,000 CYCLES MIN.
7. MECHANICAL LIFE: 1,000,000 CYCLES MIN.
8. CONTACT RESISTANCE: 100 milleOHMS MAX.
9. INSULATION RESISTANCE: 100 MEGA-OHMS MIN.
10. DIELECTRIC STRENGTH: 500VAC - 1 MINUTE
11. ▲DENOTES CRITICAL PARAMETER.
12. PACKAGED IN TRAYS, 120 PIECES PER TRAY.
13. 2002/95/EC (ROHS) COMPLIANT

REV	PCR NO	DESCRIPTION	DATE	BY
B	18157	REMOVE CE APPROVED FROM NOTES	6/24/08	BLR
A	18120	RELEASE FOR PRODUCTION	6/5/08	BLR

THE INFORMATION CONTAINED IN THIS DOCUMENT IS PROPRIETARY TO E-SWITCH AND IS NOT TO BE COPIED OR TRANSFERRED

E-SWITCH™

TITLE SS0750302F035S1A

SCALE	DATE	DR	DWG	REV
4:1	6/24/2008	BLR	Q971016	B