THIS DRAWING IS UNPUBLISHED. RELEASED FOR PUBLICATION -,- .
© COPYRIGHT - By - ALL RIGHTS RESERVED.

LOC	DIST
AJ	17

REVISIONS

P	LTR	DESCRIPTION	DATE	DWN	APVD
	A1	ECO-12-003826	27FEB2012	TITAN	MARTIN

Note:

1. SINGLE PACK
2. GOLD PLATE
3. NICKEL PLATE
4. ELECTRICAL:
   FREQUENCY RANGE:DC-4 GHz
   NOMINAL IMPEDANCE: 50 OHMS
   WORKING VOLTAGE: 500 VOLTS MAX.
   PROOF VOLTAGE: 1500 NOLTS
   INSULATION RESISTANCE: 5000 MΩ
   CONTACT RESISTANCE:
   CENTER CONTACT:1.5 MILLIOHMS
   OUT CONTACT:1 MILLIOHMS
   VSWR:1.35 MAX
5. MECHANICAL:
   DURABILIT:500 MATINGS
6. ENVIRONMENTAL:
   OPERATING TEMPERATURE RANGE: -40°C TO +60°C

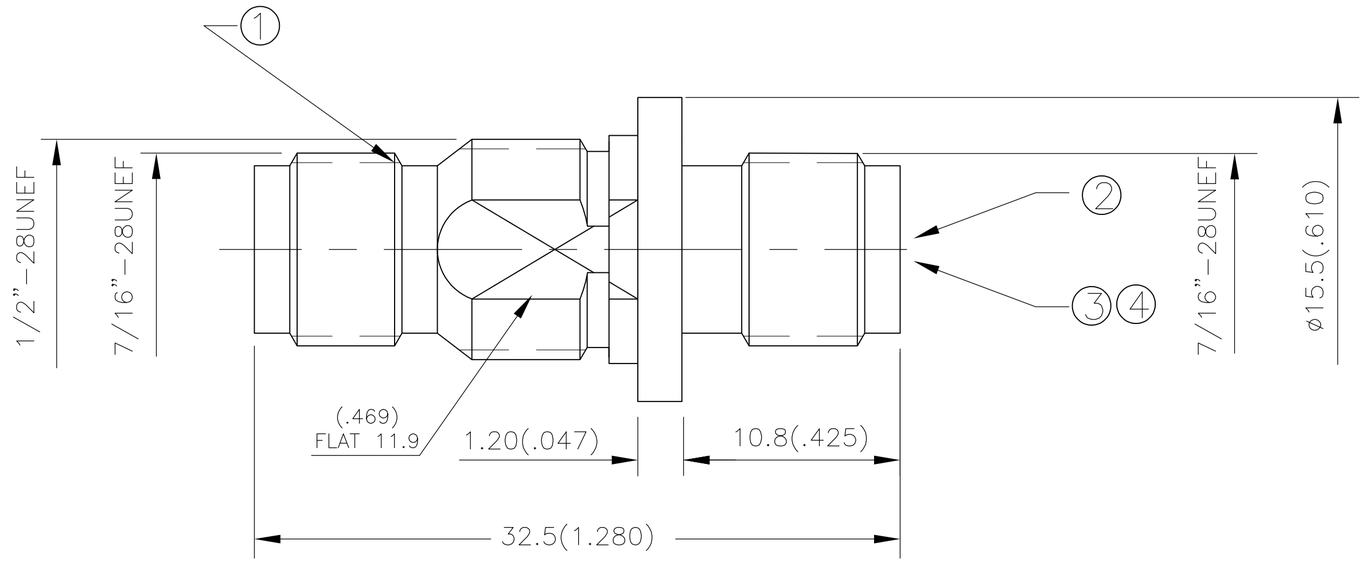

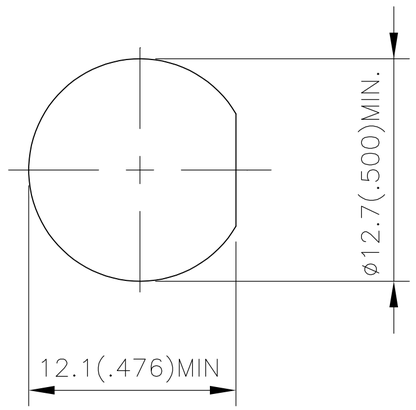

SUGGESTED PANEL CUTOUT

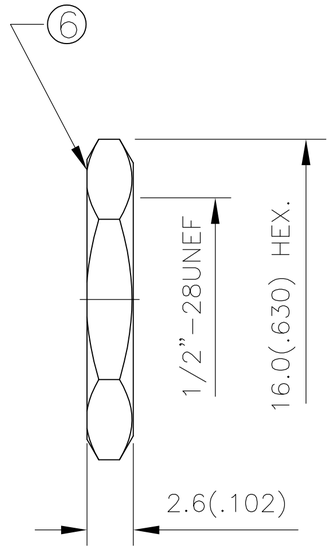

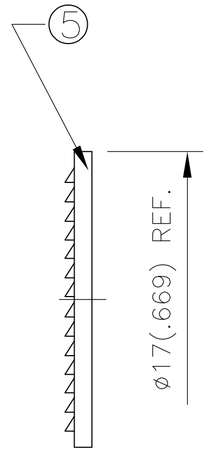

QUANTITY PER ASSY			1--0	MATERIAL	DESCRIPTION	ITEM
			1	BRASS 3	NUT	6
			1	STEEL 3	WANSHER	5
			1	BRASS 3	WANSHER	4
			2	POM	DIELECTRIC	3
			1	PHOSPHOR BRONZE 2	CENTER CONTACT	2
			1	BRASS 3	SHELL	1

PARTS LIST

THIS DRAWING IS A CONTROLLED DOCUMENT.

DIMENSIONS: mm [INCHES]

TOLERANCES UNLESS OTHERWISE SPECIFIED:
0 PLC ± -
1 PLC ± 0.2
2 PLC ± 0.1
3 PLC ± 0.05
4 PLC ± -
ANGLES ± 5°

MATERIAL: SEE NOTES
FINISH: SEE NOTES

DWN Titan Dai 17-JAN-12
CHK Gary Gao 17-JAN-12
APVD Martin Ye 17-JAN-12
PRODUCT SPEC —
APPLICATION SPEC —
WEIGHT —

TE Connectivity

NAME: JACK TO JACK, ADAPTER, BULKHEAD, TNC,50Ω

SIZE	CAGE CODE	DRAWING NO	RESTRICTED TO
A2	00779	C-619520	—

CUSTOMER DRAWING | SCALE 4:1 | SHEET 1 OF 1 | REV A1

619520

1471-9 (3/11)