ITEM	CONNECTOR PART NO.	DESCRIPTION	IPI CHECK	EOR CHECK	Applicable Tooling
1	SRSF-91T-250AS	RSF CONTACT, BRASS TIN-PLATED			APPLICATOR
2	UL1015, 12 AWG	BLACK			

SUGGESTED MATING TAB
NO SCALE

	WITHOUT STABILIZER	WITH STABILIZER
DIM. "A"	2.20 [0.087] MIN.	4.20±0.15 [0.165±0.006]
DIM. "B"	7.40 [0.291] MIN.	7.98 [0.314] MIN.
DIM. "C"	5.90 [0.232] MAX.	(7.6)

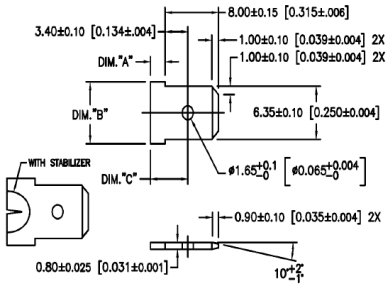

MATING TAB NOTES:
4. MAT'L: BRASS.
FINISH: SUGGESTED NO PLATING.

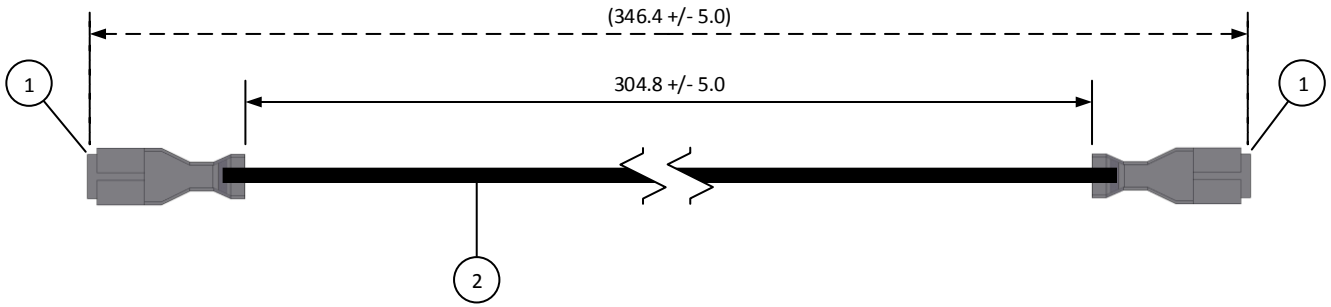

Applicable Housings

NO. OF CIRCUITS	KEYLESS HOUSING PART NO.
2	RSFP-2V-00
3	RSFP-3V-00
4	RSFP-4V-00
5	RSFP-5V-00
6	RSFP-6V-00
7	RSFP-7V-00
8	RSFP-8V-00
9	RSFP-9V-00
10	RSFP-10V-00
11	RSFP-11V-00
12	RSFP-12V-00

Other housings and configurations are available. Please contact JST for details.

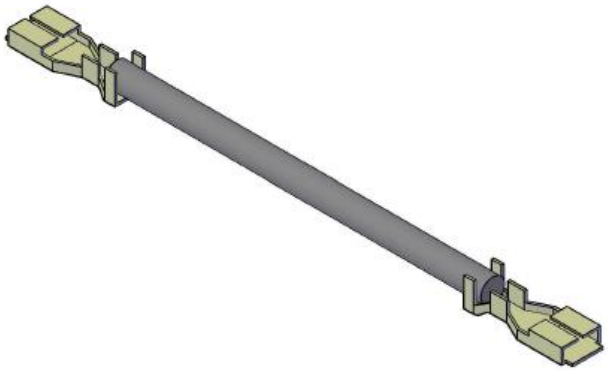

REV.	DESCRIPTION	DATE	BY

SCALE 1: 1	CUSTOMER NAME	CUSTOMER PART NO.
DIMENSIONS All dimensions are in MM with a tolerance of +/- 3.0 unless otherwise specified.	DESCRIPTION 12" LIF, POS LOCK, .250, DOUBLE-END LEADS, BRASS TIN-PLATED, F-F	
DRAWN BY STEVEN PILKINGTON	ASSEMBLY PART NO. ASRSFSRSF12K305B	
CHECKED BY JUSTIN BAKER	DRAWING NO. & REVISION GAM-138	REVISED 3/15/2016