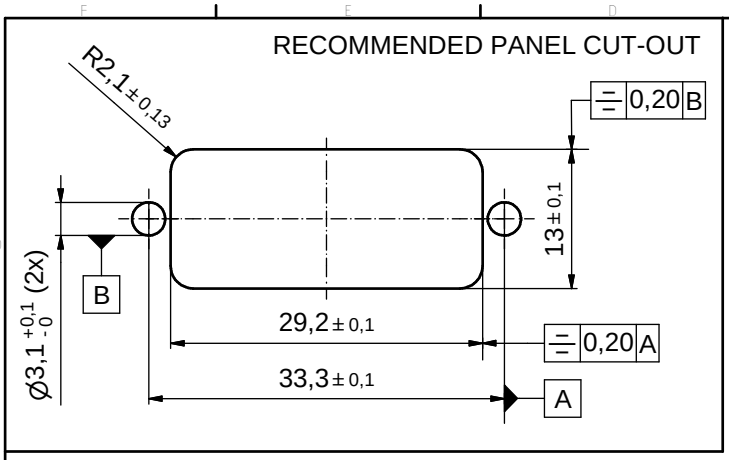

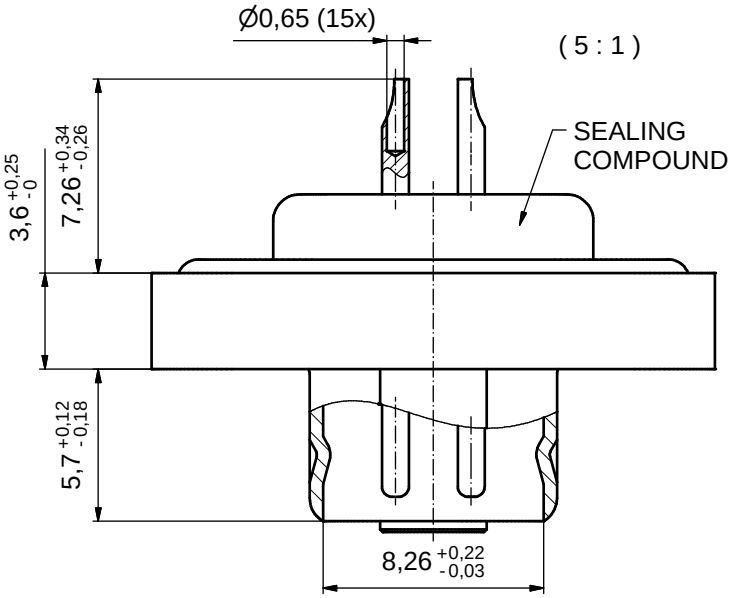

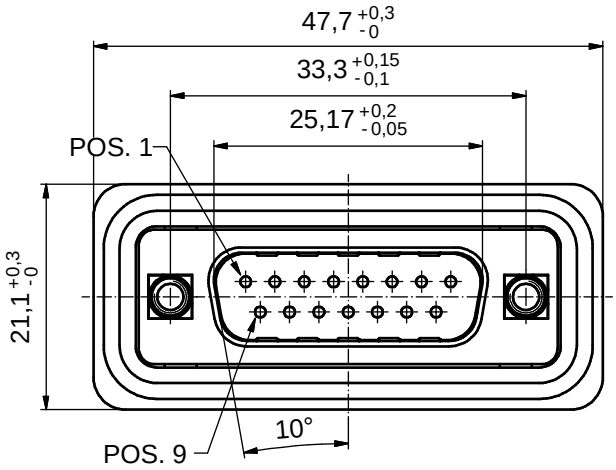

FILTER IS TOTALLY GUARDED AGAINST HUMIDITY. WATER COULD PENETRATE INTO THE MATING AREA. AT ALL TIMES WATER RESISTANT CONNECTORS NOT IN USE SHOULD BE COVERED WITH A CONEC WATER RESISTANT CAP OR HOOD.

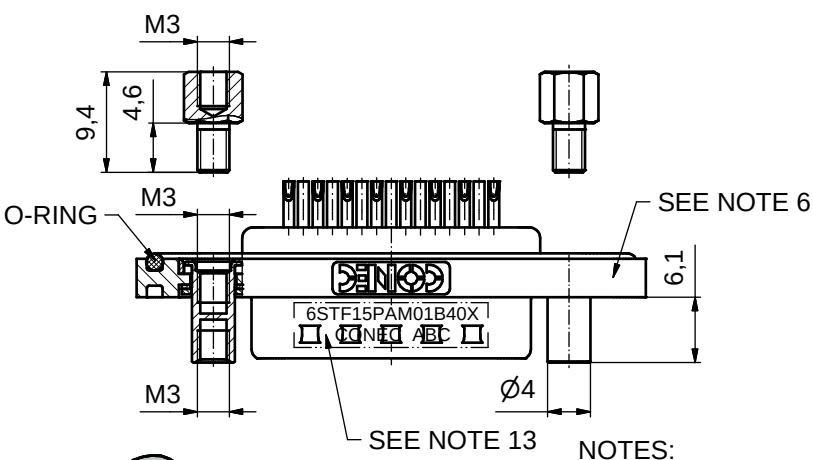

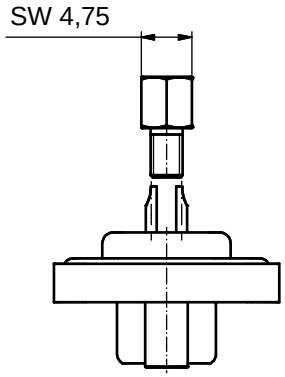

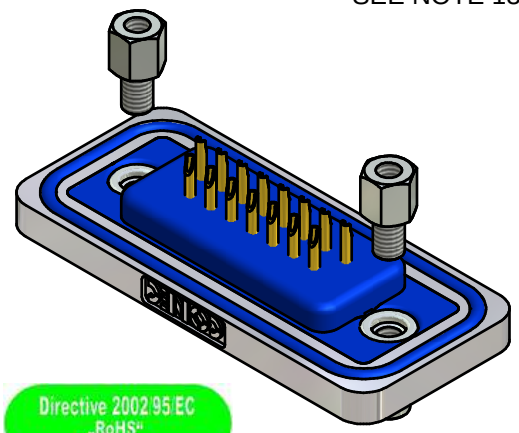

Directive 2002/95/EC „RoHS" Compliant

NOTES:

1. METALSHELLS: COPPER ALLOY; min. 320µin TIN over 40-80µin NICKEL
2. INSULATOR: HIGH TEMPERATURE PLASTIC UL 94 V-0; BLACK
3. CONTACTS: COPPER ALLOY
   PLATING: 8µin HARD GOLD over min. 50µin NICKEL
   SOLDER CUP ACCEPTS CABLE AWG 26
4. THREADED LOCKS: COPPER ALLOY; min 200µin TIN over 80µin NICKEL
5. COLLARS: COPPER ALLOY; min. 200µin TIN over 80µin NICKEL
6. FRAME: ZINC DIE CAST; NICKEL PLATED
7. HEXLOCKING SCREWS: STAINLESS STEEL
8. O-RING: SILICON; BLUE
9. RUBBER GASKET: TPE; BLACK
10. CAPACITANCE: 180pF± 20%
11. DIELECTRIC WITHSTANDING VOLTAGE: 424 VDC
12. RECOMMENDED TORQUE FOR MOUNTING SCREW 35N cm (3.1 in.LB) / max. 40N cm (3.5 in. LB)
13. CONNECTOR IS PART MARKED: 6STF15PAM01B40X CONEC ABC

APPROVAL # FREIGABE # DEBLOCAGE # AUTORIZACION # APPROVAL

CUSTOMER APPROVAL DATE:

NAME: TITLE:

COMPANY NAME:

APPROVAL # FREIGABE # DEBLOCAGE # AUTORIZACION # APPROVAL

THIS DRAWING MAY NOT BE COPIED OR REPRODUCED IN ANY WAY, AND MAY NOT BE PASSED ON TO A THIRD PARTY WITHOUT WRITTEN PERMISSION. OWNERSHIP AND COPYRIGHT OF CONEC GmbH

DO NOT ALTER CAD DRAWING BY HAND

rev.	description	date	name
a	Origin		

tolerance — dim. in mm

	date	name
drawn	14.07.10	Lehmenkühler
appd.	14.07.10	Fischer
norm		
d-old		

scale: 2:1 (5:1)

material: SEE NOTES

title: D-SUB FILTER MALE
15pos. SOLDER CUP
with threaded lock and hexlocking screw

dwg no: 15K1A693

Inventor 10

DIN-A3

sh: 1

part no: 6STF15PAM01B40X