used for: D-SUB HD

Part NO.	POS.	A -0.76	B -0.25	C	D ±0.13	E ±0.13	F ±0.13	G ±0.13	H ±0.13
302A10129X	15	31.19	16.46	$25.00^{+0.12}_{-0.13}$	20.5	22.2	25.00	11.4	13.0
302A10139X	26	39.52	24.79	$33.30^{+0.15}_{-0.1}$	28.8	30.5	33.30	11.4	13.0
302A10149X	44	53.42	38.50	47.04 ±0.13	42.5	44.3	47.04	11.4	13.0
302A10159X	62	69.70	54.96	63.50 ±0.13	59.1	60.7	63.50	11.4	13.0

ⓑ

ⓑ RECOMMENDED PANEL CUT-OUT

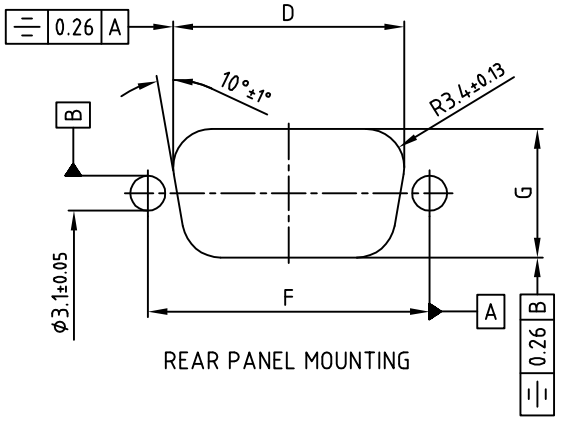

REAR PANEL MOUNTING

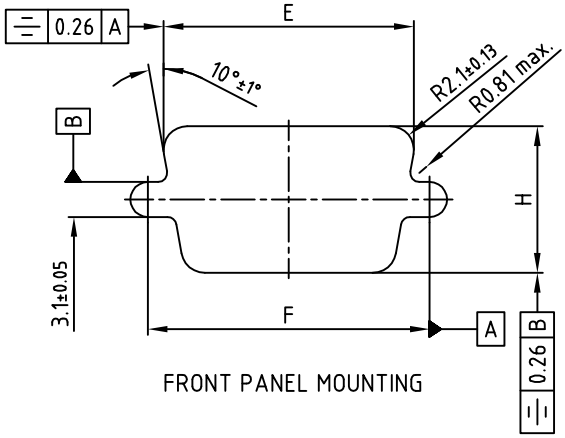

FRONT PANEL MOUNTING

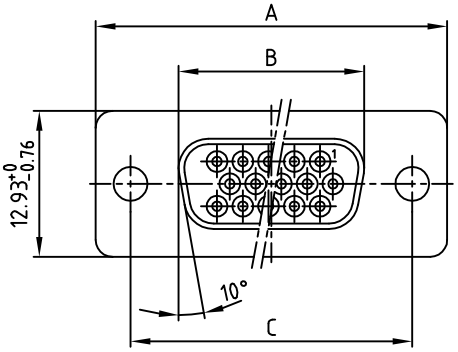

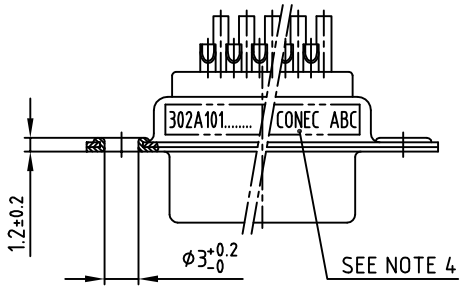

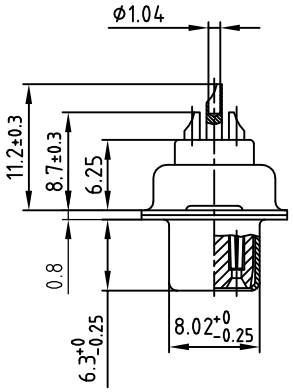

APPROVAL ❋ FREIGABE ❋ DEBLOCAGE ❋ AUTOR/ZACION ❋ APPROVAL

CUSTOMER APPROVAL DATE:

NAME: TITLE:

COMPANY NAME:

Directive 2002/95/EC RoHS compliant

NOTES:
1. METALSHELLS: STEEL; min. 315µin TIN over 40-80µin NICKEL
2. INSULATORS: PBT GF UL 94 V-0, BLACK
3. CONTACTS: COPPER ALLOY
   PLATING: GOLD FLASH over NICKEL
   SOLDER CUP ACCEPTS CABLE AWG 22
4. CONNECTOR IS PART MARKED: PART-NO. CONEC ABC

THIS DRAWING MAY NOT BE COPIED OR REPRODUCED IN ANY WAY, AND MAY NOT BE PASSED ON TO A THIRD PARTY WITHOUT WRITTEN PERMISSION. OWNERSHIP AND COPYRIGHT OF CONEC GmbH

DO NOT ALTER CAD DRAWING BY HAND

rev.	description	date	name
2 x b	Ä6008	03.06.2014	Lehmen.
a	Original		

tolerance

	date	name
2002		
drawn	11.10.	Parei
appd.	11.10.	Mickenbecker
norm	DIN 41652	
d-old		

CONEC®

scale: 2:1

material: SEE NOTES

title: D-SUB HD FEMALE
15-62pos. SOLDER CUP

dwg no: 16K1A782

AutoCAD 2000

DIN-A 4

sh: 1/1

part no: SEE TABLE