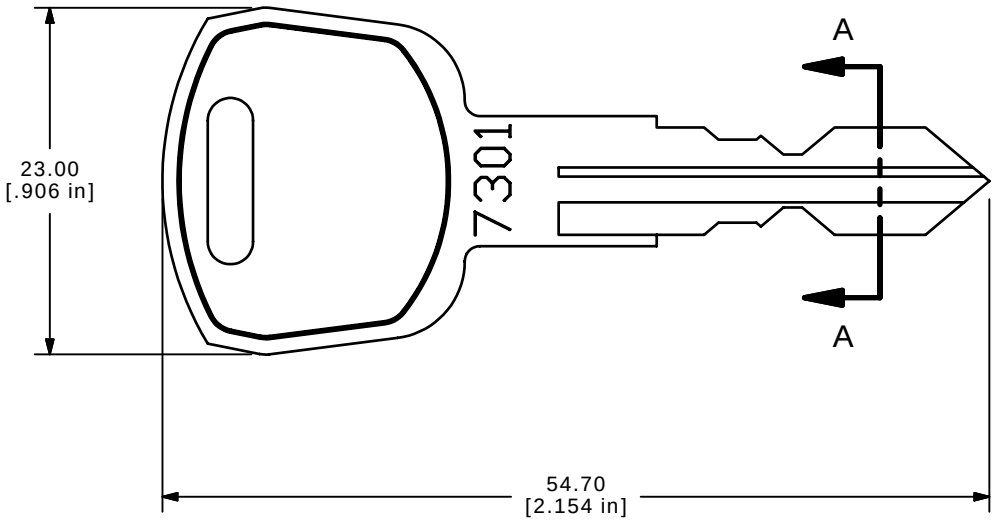

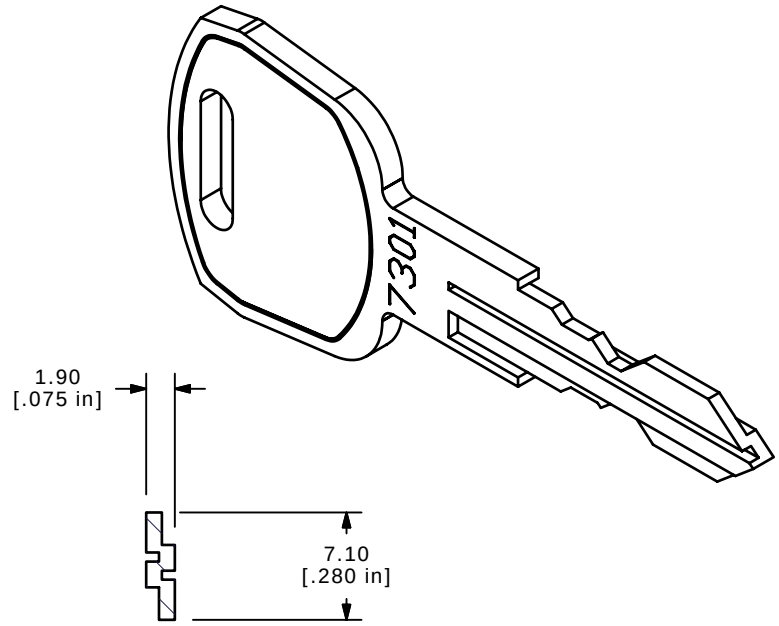

SECTION A-A
SCALE 2 : 1

NOTES:
1. ALL DIMENSIONS IN MM [INCH]
2. GENERAL TOLERANCE: x.x=±0.4
   x.xx=±0.25
3. MATERIAL: BRASS W/NICKLE PLATE
4. REVERSIBLE DOUBLE CUT

REV	PCR NO	DESCRIPTION	DATE	BY
C	16152	ADD ENGRAVING	6/15/2006	CT
B	16069	EDIT NOTES AND TITLE	5/31/06	CT
A	16019	NEW PART RELEASE	5/17/06	CT

THE INFORMATION CONTAINED IN THIS DOCUMENT IS PROPRIETARY TO E-SWITCH AND IS NOT TO BE COPIED OR TRANSFERRED

E-SWITCH®

TITLE KOKEY7301 (KO119A)

SCALE	DATE	DR	DWG	REV
2:1	5/17/2006	CT	K900016	C