- Station Mounts Assure Even Spacing and Elevation
- Provides Entire Array Positioning
- May be Cut for Use from 2 to 15 Stations
- Molded from Natural Nylon per ASTM D-4066
- Made from 94V-2 Rated Nylon

12 Station Mount T-1 3/4 (5mm) LEDs

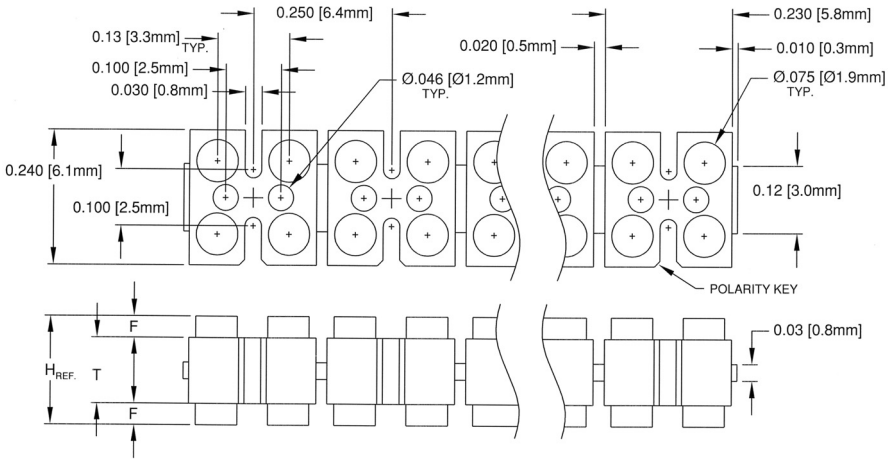

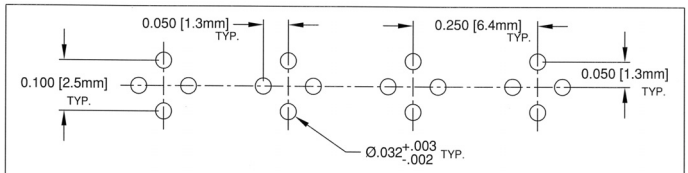

Recommended Mounting Holes

T-175 Series
Color: Natural, Price Code: D

Part No.	H	T	F
T-175-060	.060 (1.5)	.040 (1.0)	.010 (.25)
T-175-070	.070 (1.8)	.040 (1.0)	.015 (.38)
T-175-080	.080 (2.0)	.040 (1.0)	.020 (.51)
T-175-090	.090 (2.3)	.040 (1.0)	.025 (.64)
T-175-100	.100 (2.5)	.040 (1.0)	.030 (.76)
T-175-110	.110 (2.8)	.040 (1.0)	.035 (.89)
T-175-120	.120 (3.0)	.040 (1.0)	.040 (1.0)
T-175-130	.130 (3.3)	.040 (1.0)	.045 (1.1)
T-175-140	.140 (3.6)	.040 (1.0)	.050 (1.3)
T-175-150	.150 (3.8)	.040 (1.0)	.055 (1.4)
T-175-160	.160 (4.1)	.040 (1.0)	.060 (1.5)
T-175-170	.170 (4.3)	.040 (1.0)	.065 (1.7)
T-175-180	.180 (4.6)	.040 (1.0)	.070 (1.8)
T-175-190	.190 (4.8)	.040 (1.0)	.075 (1.9)
T-175-200	.200 (5.1)	.040 (1.0)	.080 (2.0)
T-175-210	.210 (5.3)	.040 (1.0)	.085 (2.2)

T-176 Series
Color: Natural, Price Code: D

Part No.	H	T	F
T-176-200	.200 (5.1)	.150 (3.8)	.025 (.64)
T-176-210	.210 (5.3)	.150 (3.8)	.030 (.76)
T-176-220	.220 (5.6)	.150 (3.8)	.035 (.89)
T-176-230	.230 (5.8)	.150 (3.8)	.040 (1.0)
T-176-240	.240 (6.1)	.150 (3.8)	.045 (1.1)
T-176-250	.250 (6.4)	.150 (3.8)	.050 (1.3)
T-176-260	.260 (6.6)	.150 (3.8)	.055 (1.4)
T-176-270	.270 (6.9)	.150 (3.8)	.060 (1.5)
T-176-280	.280 (7.1)	.150 (3.8)	.065 (1.7)
T-176-290	.290 (7.4)	.150 (3.8)	.070 (1.8)
T-176-300	.300 (7.6)	.150 (3.8)	.075 (1.9)
T-176-310	.310 (7.9)	.150 (3.8)	.080 (2.0)
T-176-320	.320 (8.1)	.150 (3.8)	.085 (2.2)
T-176-330	.330 (8.4)	.150 (3.8)	.090 (2.3)
T-176-340	.340 (8.6)	.150 (3.8)	.095 (2.4)
T-176-350	.350 (8.9)	.150 (3.8)	.100 (2.5)