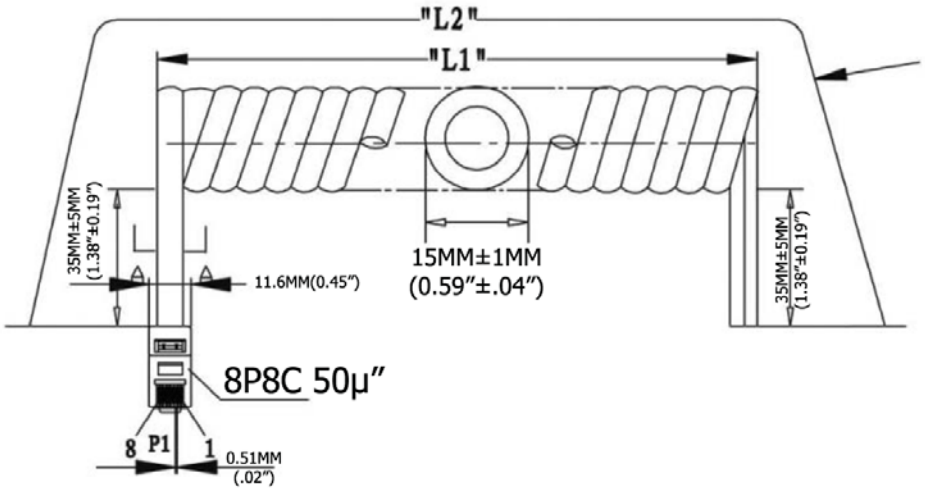

Extended length is with 500g of force

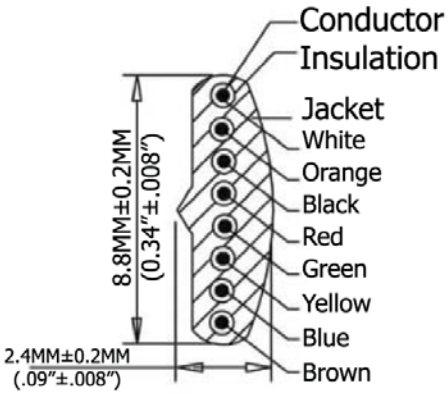

SEC: A=A

P1	COLOR
1	WHITE
2	ORANGE
3	BLACK
4	RED
5	GREEN
6	YELLOW
7	BLUE
8	BROWN

Extended Length ("L2")	Typical Retracted Length ("L1")
60.0 Inches - 69.0 Inches	28.0 Inches
1,524.0MM-1,752.6MM	711.2MM

Material:

- Plug Housing: Polycarbonate, clear
- Plug Terminal: 0.36"[0.14MM] Thick Phosphor Bronze
- Connector: 50µ" of Selective Gold Contact Plating
  - Area, Gold flash over the remainder
  - Over 2.54µm[.000100] thick nickel underplate
- Conductor(X8C): 26AWG (0.12X12) Bare Copper
- Insulation(X8C): PP6331 ID 0.95-1.0
- Jacke: PVC No UL 80 P
- Package: Individual PE Bag

Electrical:

- Voltage rating: 30V (DC)

RoHS Complaint

Scale	1:1						Name
TOLERANCE							
X.X	±0.40				Drawn	11.02.11	Chappell
X.XX	±0.25				Approved		
X.XXX	±0.15						
Angle	±3°						
			Modification	Date	Name		

ASSMANN WSW components

Item No.
AT-C-26-8/8/B-5-OE

Title
NON-UL 26AWG (0.16/7)*8C, O.D.: 2.4*8.8MM, Single Plug, 50µ" of contact plating, BLACK

Drawing No.

rev00

Replace

Sheet