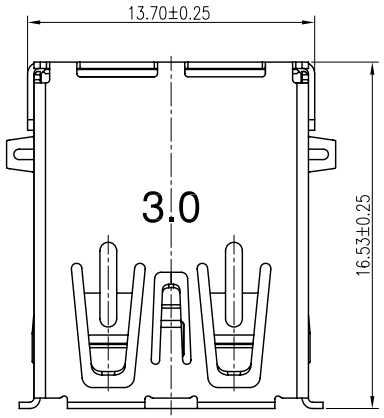

NOTE:
MATERIAL:
HOUSING:PBT+30% G.F. UL 94V-0
CONTACT 5P:BRASS
CONTACT 4P:PHOSPHOR BRONZE
SHELL:BRASS
PLATING:
CONTACT: GOLD FLASH AND TIN OVER NICKEL PLATED
SHELL: NICKEL PLATED OVER ALL
SPECIFICATION:
CURRENT RATING:1.8A FOR VBUS AND GND CONTACTS
1.5A FOR OTHER CONTACTS
WITHSTANDING VOLTAGE:100V AC(RMS)
INSULATION RESISTANCT:100MΩ MIN AT 100V DC
CONTACT RESISTANCE:30mΩ MAX FOR VBUS AND GND CONTACTS
50mΩ MAX FOR OTHER CONTACTS
MATING FORCE:3.57KgF MAX
UNMATING FORCE:1.02KgF MIN

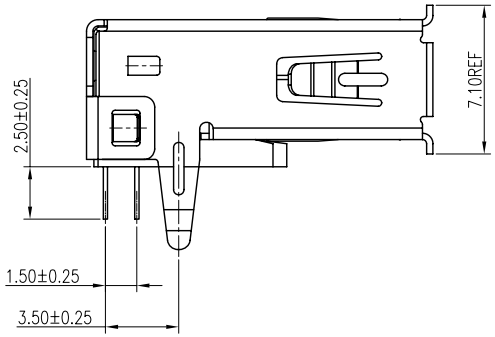

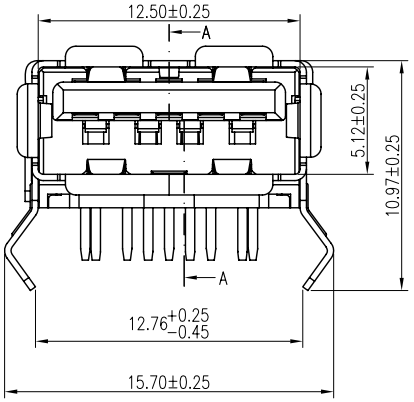

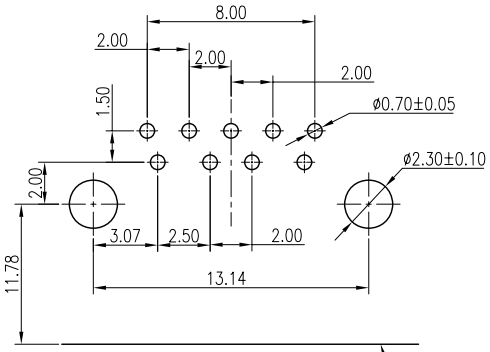

RECOMMENDED PCB LAYOUT

CONNECTOR FRONT EDGE

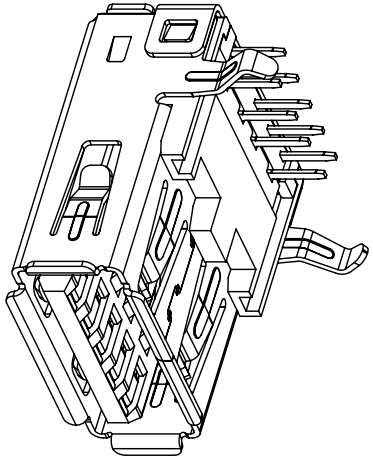

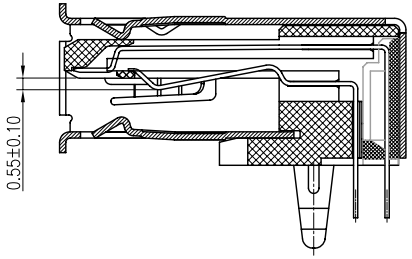

SECTION A-A

10/07/09	ANG		NEW DRAWING		A0
DATE	DR.BY	ECN.NO.	DESCRIPTION	MARK	VER.

-TOLERANCES-
UNLESS OTHERWISE SPECIFIED

CnC Tech . LLC

TITLE: USB 3.0 A/F DIP 90°15U"

X.X	±0.30	X.X°	±3.00°	APPD:	PRODUCT NO: 1003-001-01000			
X.XX	±0.20	X.XX°	±1.00°	CHECK:	DATE	SCALE	UNIT	TYPE	PAGE
X.XXX	±0.10	X.XXX°	±0.500°	DRAW:	2010.07.09	1:1	mm	CD	1 / 1