DRAWING MADE IN THIRD ANGLE PROJECTION

1385469 ⇔ 1385469

/home/us016926/DMTECmod

PART NUMBER	REV	FIRST USED
1385469-1	B	122500-1
1385469-2	B	565435-5
1385469-3	B	354500-1

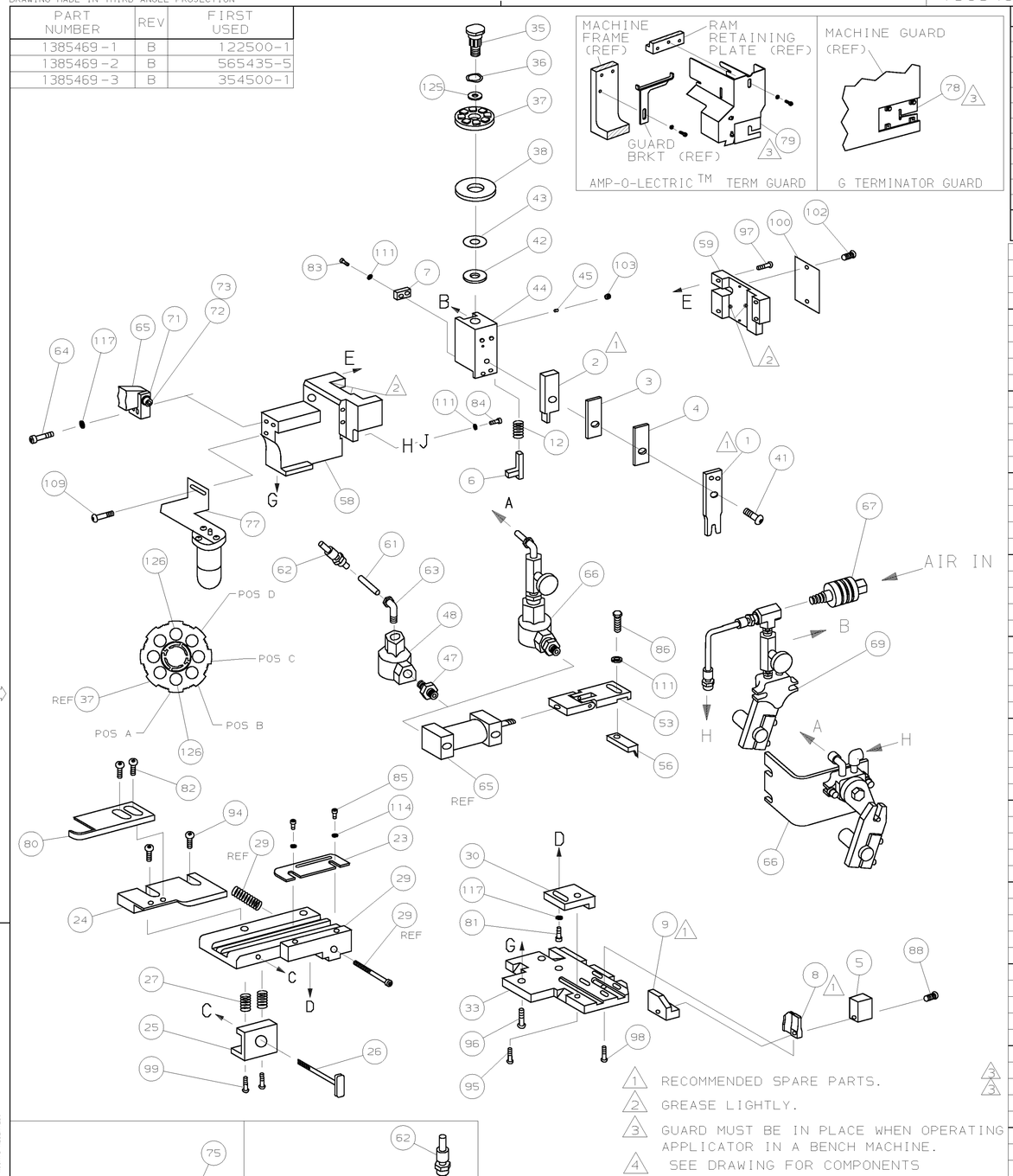

TERMINAL NAME: 45 AMP POWER PRODUCT (10-14 AWG)

AMP TERM PN	-
1445962	-

CRIMP DATA BLOCK

PAD LTR	CRIMP HEIGHT	WIRE SIZE
A	.116 ±.003 [2.95 ±0.08mm]	10
B	.105 ±.003 [2.67 ±0.08mm]	12
C	.096 ±.003 [2.44 ±0.08mm]	14
D	NOT	USED

CRIMP	SIZE	TYPE	RANGE
WIRE	.155 [3.94mm]	F	14-10
INSUL	-	-	-

WIRE STRIP LENGTH	TERM APPL SPEC	FEED	APPL INSTRUCTION	SET UP GAGE	LAYOUT
.266-.297	NONE	.547	408-8040	458637-1	L2705

-3	-2	-1	U/M	DWG SIZE	PART NO	DESCRIPTION	ITEM NO
							129
2	2	2	-	C	6-354778-9	PIN, WIRE DISC (.2840)C	128
2	2	2	-	C	4-354778-9	PIN, WIRE DISC (.2740)B	127
2	2	2	-	C	3-354778-1	PIN, WIRE DISC (.2650)A	126
1	1	1	-	A	986950-1	WASHER, FLAT PRECISION	125
1	1	1	-	A	217238-1	GENERAL INSTRUCTION PACKAGE	124
1	1	1	-	-	4088040	SF APPL INST 408-8040	123
							122
							121
							120
							119
							118
3	3	3	-	A	21024-5	WASHER, LOCK(#10)ADJ BLOCK	117
							116
							115
2	2	2	-	A	21024-2	WASHER,LOCK(#4)FRONT STP GUIDE	114
							113
2	-	2	-	A	21055-6	WASHER,FLAT(#8)STRIPPER	112
4	4	4	-	A	21024-4	WASHER,LOCK(#8)STRIPPER	111
							110
-	1	-	-	A	2-21002-6	SCR,BHC(10-32x.38)LUBE ASSY	109
							108
							107
							106
							105
1	1	-	-	A	992031-1	PIN, CLEVIS	104
1	1	1	-	A	21009-2	SCR,SKT SET(1/4-20x.25 LW)RAM	103
2	2	2	-	A	21017-2	SCR,DRIVE(#2x.19)ID PLATE	102
							101
1	1	1	-	B	461264-1	PLATE, IDENTIFICATION	100
2	2	2	-	A	3-21002-0	SCR,BHC(10-32x.88)DRAG	99
1	1	1	-	A	22733-8	SCR,BHC(8-32x.38 LW)ANVIL	98
4	4	4	-	A	2-21002-9	SCR,BHC(10-32x.75)CAP	97
3	3	3	-	A	2-22733-8	SCR,BHC(1/4-20x.62)HSG	96
1	1	1	-	A	2-21002-7	SCR,BHC(10-32x.50)SG ADJ BLK	95
2	2	2	-	A	2-21002-2	SCR,BHC(8-32x.50)TERM H DWN	94
							93
							92
							91
							90
1	1	-	-	A	7-21000-9	SCR,SHC(4-40x.19)STRIPPER	89
1	1	-	-	A	3-21000-0	SCR,SHC(8-32x.88)SHEAR	88
							87
1	1	1	-	A	2-22603-1	SCR,HEX HD(8-32x.38)FEED FINGER	86
2	2	2	-	A	1-21000-5	SCR,SHC(4-40x.50)FR ST GUIDE	85
1	1	1	-	A	2-21000-8	SCR,SHC(8-32x.62)STRIPPER	84
2	2	2	-	A	2-21000-6	SCR,SHC(8-32x.38)HOLDDOWN	83
2	2	2	-	A	2-21002-0	SCR,BHC(8-32x.25) GUIDE	82
1	1	1	-	A	3-21000-4	SCR,SHC(10-32x.38)SG ADJ BL	81
1	1	1	-	A	1633055-1	GUIDE, STOCK	80
-	1	-	-	B	462992-7	GUARD ASSY	79
REF	-	-	-	B	679532-1	INSERT, GUARD	78
-	1	-	-	C	1-465184-0	LUBRICATOR ASSY	77
							76
-	1	-	-	A	22317-3	ELBOW, COPPER TUBE	75
							74
1	1	1	-	B	21024-8	WASHER, LOCK (3/8)AIR FEED	73
1	1	1	-	B	3-21001-5	SCR, SHC (3/8-16x1.00)AIR FEED	72
1	1	1	-	B	459610-1	MOUNT, FEED BRACKET	71

QTY REQD PER ASSY — PARTS LIST

-1	LEADMAKER	AIRFEED
-2	BENCH MODEL K	AIRFEED
-3	BENCH MODEL G	AIRFEED

-3	-2	-1	U/M	DWG SIZE	PART NO	DESCRIPTION	ITEM NO
1	-	1	-	A	986220-9	CLAMP, WIRE	70
-	1	-	-	C	455350-1	AIR BLAST ASSY	69
							68
-	REF	-	-	A	24042-2	VALVE, SHUT OFF	67
-	1	-	-	C	692655-1	AIR FEED VALVE ASSY	66
1	1	1	-	B	461065-1	AIR FEED ASSY (1 INCH)	65
2	2	2	-	A	3-21000-9	SCR,SHC(10-32x1.00)AIR ASSY	64
1	-	1	-	A	980285-2	ELBOW, SWIVEL 1/8 NPT - 1/4 T	63
2	-	2	-	A	23238-1	QUICK DISCONNECT	62
21.00	-	21.00	IN	A	27319-4	TUBING, POLY-FLO Ø.25	61
18.00	-	18.00	IN	A	27319-4	TUBING, POLY-FLO Ø.25	60
1	1	1	-	C	454220-1	CAP, RAM	59
1	1	1	-	D	454485-1	HOUSING	58
							57
1	1	1	-	B	4-694433-0	PAWL, FEED	56
							55
							54
1	1	1	-	B	461062-1	FEED FINGER ASSY	53
							52
							51
							50
							49
1	-	1	-	A	22374-7	VALVE, QUICK EXHAUST	48
1	-	1	-	A	22304-1	NIPPLE, HEX 1/8 NPT	47
-	1	-	-	A	689446-2	TUBE, AIR BLAST	46
1	1	1	-	A	690191-1	PLUG, NYLON	45
1	1	1	-	C	1338281-5	RAM	44
1	1	1	-	A	690125-1	WASHER, LAMINATED	43
1	1	1	-	A	690124-3	WASHER, RAM	42
1	1	1	-	A	7-21002-9	BOLT, CRIMPER(5/16x1.00)	41
							40
							39
1	1	1	-	A	690223-2	SPACER, INSULATION DISC	38
1	1	1	-	D	354777-1	WIRE DISC, PLASTIC	37
1	1	1	-	A	22480-5	WASHER, SPRING	36
1	1	1	-	B	690212-1	POST, RAM	35
							34
1	1	1	-	D	455675-1	PLATE, BASE	33
							32
							31
1	1	1	-	B	455689-1	BLOCK, STRIP GUIDE ADJ	30
1	1	1	-	C	1-318756-2	PLATE, STRIP GUIDE ASSY	29
							28
2	2	2	-	A	22281-7	SPRING, DRAG	27
1	1	1	-	B	690546-1	LEVER, DRAG RELEASE	26
1	1	1	-	B	3-690754-4	DRAG, TERMINAL	25
1	1	1	-	D	1320860-6	GUIDE, STRIP (REAR)	24
1	1	1	-	A	1-690712-3	GUIDE, STRIP (FRONT)	23
-	-	1	-	B	456468-5	STRIPPER	22
							21
1	1	-	-	A	679218-1	STRIPPER WIRE STOP ASSY	20
1	1	-	-	B	458949-1	STRIPPER	19
							18
							17
							16
							15
							14
							13
1	1	1	-	B	23846-1	SPRING, HOLD DOWN	12
							11
							10
1	1	1	-	B	1-853714-9	PLATE, REAR SHEAR	9
1	1	1	-	C	1320567-5	ANVIL	8
1	1	1	-	B	240641-1	SPACER	7
1	1	1	-	A3	1633037-3	HOLD-DOWN	6
1	1	1	-	A4	1633038-2	SPACER	5
1	1	1	-	C	2-455888-9	SPACER, CRIMPER	4
1	1	1	-	C	455888-4	SPACER, CRIMPER	3
1	1	1	-	C	1-853720-3	BLADE, SLUG	2
1	1	1	-	C	456415-7	CRIMPER, WIRE	1

QTY REQD PER ASSY — PARTS LIST

REVISION OF EACH ASSY NO (WHEN BLANK, USE DWG REVISION)

FENCE SET-UP DIM

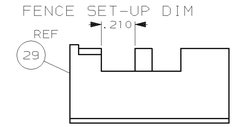

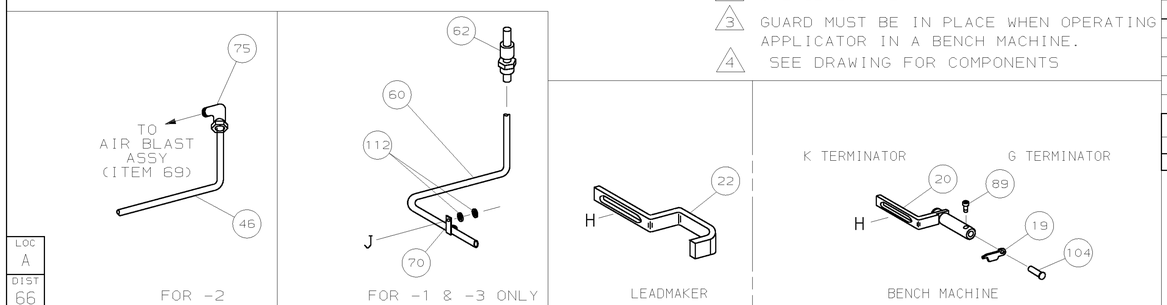

P	F	LTR	REVISION RECORD	APP	DATE
		B	ECN 0150-0367-05	TE	4-05
		A	REVISED	BH	FEB04

DIMENSIONS IN INCHES. DO NOT SCALE PRINT.
TOLERANCES UNLESS OTHERWISE SPECIFIED:
2 PLC DEC ±.25
3 PLC DEC ±.020
4 PLC DEC ±-
ANGLES ± -
SURF TEXTURE: √
REMOVE BURRS, BREAK SHARP EDGES R.015 MAX

MATL	-	HT TR	-	FIN	-
	-		-		-

DR 29AUG02 B.HIGMAN — APP 29AUG02 T.ELBIN
CHK 29AUG02 G.BAILEY — REL 25FEB04 B.HIGMAN

AMP Incorporated, Harrisburg, PA 17105-3608

NAME: SIDE FEED HDM APPLICATOR — MACHINE REF: MINI APPL

SCALE: - — D — DWG NO: 1385469 — SHEET 1 OF 1 — REV B

CAGE CODE 00779 — CUSTOMER AND ASSEMBLY DRAWING — RESTRICTED TO -

THIS DRAWING IS A CONTROLLED DOCUMENT.
RELEASED FOR PUBLICATION SEPTEMBER 25,2003
BY AMP INCORPORATED. ALL RIGHTS RESERVED.
© COPYRIGHT 2003

LOC A — DIST 66