THIS DRAWING IS UNPUBLISHED. RELEASED FOR PUBLICATION 20
© COPYRIGHT 20 BY - ALL RIGHTS RESERVED.

PART NUMBER	REV	TERMINATOR	FEED TYPE	DESCRIPTION
1530047-1	B	LEADMAKER	MECH POST FEED	CUTS CARRIER
1530047-2	B	BENCH	MECH PRE FEED	CUTS CARRIER
1530047-6	B	LEADMAKER	MECH POST FEED	CONTINUOUS CARRIER
7-1530047-1	B	LEADMAKER	MECH POST FEED	-1 AND SPARE PARTS
7-1530047-2	B	BENCH	MECH PRE FEED	-2 AND SPARE PARTS
7-1530047-6	B	LEADMAKER	MECH POST FEED	-6 AND SPARE PARTS
7-1530047-7	A	-	-	SPARE PARTS KIT

SET UP GAGE 458637-3

LOC	DIST
A	66

REVISIONS

P	LTR	DESCRIPTION	DATE	DWN	APVD
	A	RELEASED	12FEB2009	MEH	GB
	B	ECR-12-004693	12MAR2012	MY	GB

CRIMP DATA		TEC TERMINAL	TEC CRIMP SPECS
TERMINAL NAME: POSITIVE LOCK RECEPTACLE			
CRIMP	SIZE	TYPE	RANGE
WIRE	2.79 [.110 IN]	F	1.00-2.50mm
INSUL	4.06 [.160 IN]	OV	2.70-4.00 [.106-.157 IN]
WIRE STRIP LENGTH 2.00-3.00 [.078-.118 IN]			APPL INSTRUCTIONS 408-8322
TERMINAL APPL SPEC	114-2153 - -		FEED 26.40 [1.039 IN]

TERMINALS APPLIED

880645-6	-	-	-
-	-	-	-
-	-	-	-
-	-	-	-
-	-	-	-

WIRE SIZE	CRIMP HEIGHT	PIN PN & LENGTH [IN]
2.50mm²	2.08 ±0.05 [.082 ±.002 IN]	6-354778-3 [.2810]
2.00mm²	1.93 ±0.05 [.076 ±.002 IN]	7-354778-5 [.2870]
1.50mm²	1.75 ±0.05 [.069 ±.002 IN]	9-354778-2 [.2955]
-	-	
-	-	
-	-	
-	-	
-	-	
-	-	
-	-	
-	-	
-	-	

1. RECOMMENDED SPARE PARTS.
2. GREASE RAM, CAM, CAM FOLLOWER AND FEED ROD LIGHTLY.
3. CERTAIN TERMINALS REQUIRE LUBRICATION. REFER TO THE APPLICATOR INSTRUCTION SHEET FOR MORE INFORMATION.
4. LUBRICATE DAILY PER THE APPLICATOR INSTRUCTION SHEET SUPPLIED WITH THE APPLICATOR.

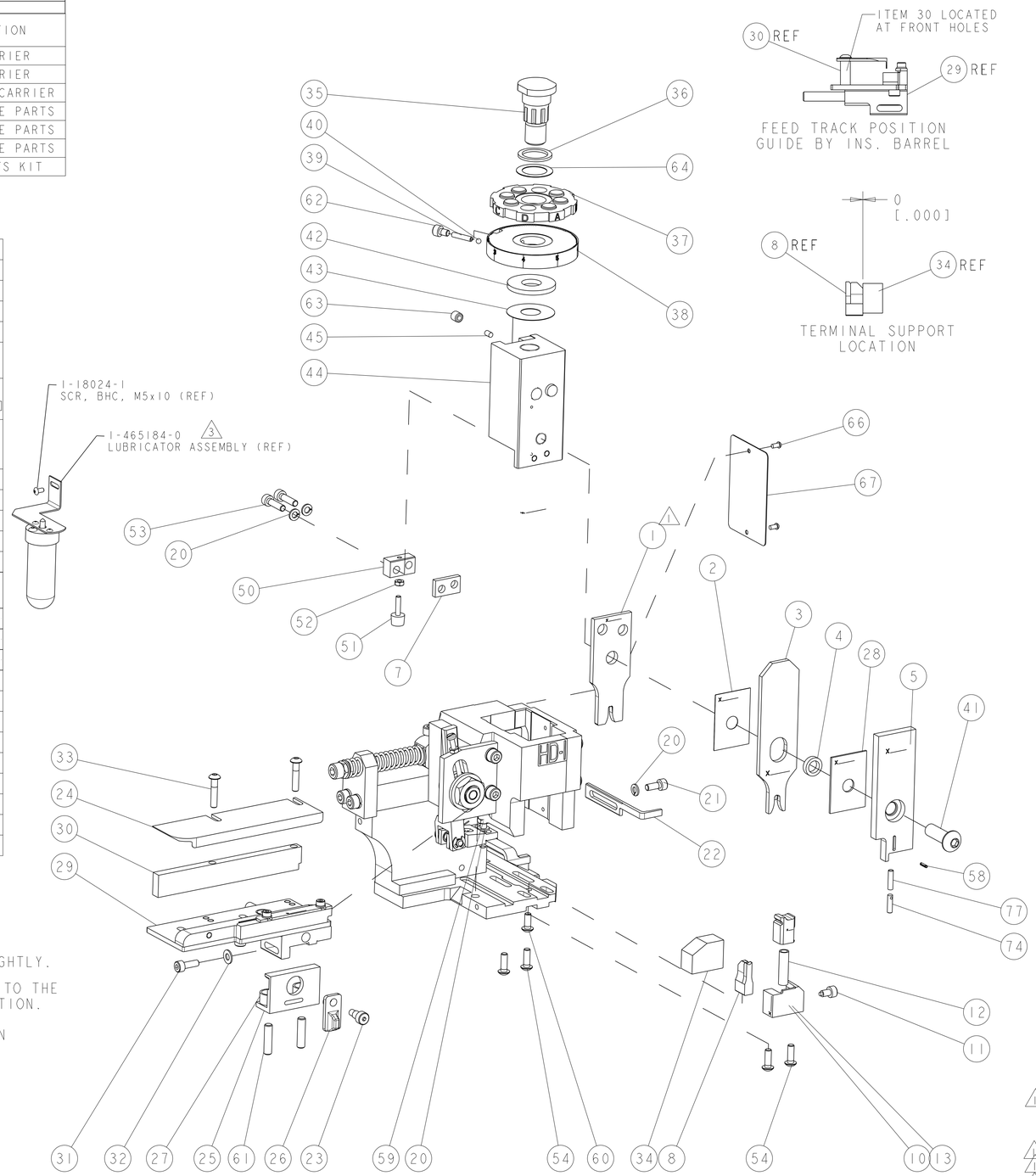

-	1	1	1	1	1	1	1-22278-0	SPRING, COMPRESSION	77
-	1	1	1	1	1	1	854769-4	HOLDER, INS	74
-	1	1	1	1	1	1	1338705-1	DOCUMENTATION PACKAGE	71
-	1	1	1	1	1	1	461264-1	PLATE, IDENTIFICATION	67
-	2	2	2	2	2	2	21017-2	SCREW, DRIVE	66
-	1	1	1	1	1	1	986950-1	WASHER, FLAT PRECISION	64
-	1	1	1	1	1	1	3-18031-0	SCR, SET, CUP POINT M6 X 6.0	63
-	1	1	1	1	1	1	18023-9	SCR, SKT HD CAP M4 X 6.0	62
-	2	2	2	2	2	2	2-18032-5	SCR, SET, FLT POINT M5 X 20.0	61
-	1	1	1	1	1	1	18024-7	SCR, BTN SKT HD CAP (M4 X 10.0)	60
-	1	1	1	1	1	1	5-18022-2	SCR, HEX HD CAP M4 X 8.0	59
-	1	1	1	1	1	1	21028-2	PIN, SLOTTED SPRING .062 X .250	58
-	1	1	1	1	1	1	1333240-1	PAWL, FEED	56
-	4	4	4	4	4	4	18024-8	SCR, BTN SKT HD CAP (M4 X 12.0)	54
-	2	2	2	2	2	2	1-18023-3	SCR, SKT HD CAP M4 X 16.0	53
-	1	1	1	1	1	1	18030-1	NUT, HEX, REG M3	52
-	1	1	1	1	1	1	811242-6	BUMPER, HOLD DOWN	51
-	1	1	1	1	1	1	690753-2	SPACER, TONKER	50
-	1	1	1	1	1	1	18024-3	SCR, BTN SKT HD CAP (M3 X 10.0)	49
-	-	1	-	-	1	-	1338675-1	CAM, UNIVERSAL PRE-FEED	48
-	1	-	1	1	-	1	1338676-1	CAM, UNIVERSAL POST-FEED	47
-	1	1	1	1	1	1	1320999-3	APPLICATOR SUBASSEMBLY, HDI	46
-	1	1	1	1	1	1	690191-1	PLUG,NYLON	45
-	1	1	1	1	1	1	1338660-1	RAM, (SIDE FEED)	44
-	1	1	1	1	1	1	690125-1	SHIM SUB-ASSY	43
-	1	1	1	1	1	1	690124-1	WASHER, RAM (.115)	42
-	1	1	1	1	1	1	2-18024-6	SCR, BTN SKT HD CAP (M8 X 25.0)	41
-	1	1	1	1	1	1	23241-1	BALL, STEEL	40
-	1	1	1	1	1	1	2-22278-7	SPRING, COMPRESSION	39
-	1	1	1	1	1	1	1-1320922-2	DISC, ADJUST, INSULATION CRIMP	38
-	1	1	1	1	1	1	354777-1	WIRE DISC, ASSEMBLY	37
-	1	1	1	1	1	1	22480-5	SPRING, COMPRESSION	36
-	1	1	1	1	1	1	690212-1	POST, RAM	35
-	1	1	1	1	1	1	1320934-6	SUPPORT, TERMINAL	34
-	2	2	2	2	2	2	1-18024-0	SCR, BTN SKT HD CAP (M4 X 20.0)	33
-	1	1	1	1	1	1	18027-2	WASHER, FLAT, REG M4	32
-	1	1	1	1	1	1	1-18023-2	SCR, SKT HD CAP M4 X 12.0	31
-	1	1	1	1	1	1	1-1320908-2	SPACER, STRIP GUIDE	30
-	1	1	1	1	1	1	1633073-7	STRIP GUIDE ASSEMBLY	29
-	1	1	1	1	1	1	1-455888-0	SPACER, CRIMPER	28
-	2	2	2	2	2	2	1-22284-0	SPRING, COMPRESSION	27
-	1	1	1	1	1	1	356835-1	LEVER, DRAG RELEASE	26
-	1	1	1	1	1	1	240792-1	DRAG, TERMINAL	25
-	1	1	1	1	1	1	1320928-2	PLATE, STRIP GUIDE	24
-	1	1	1	1	1	1	980371-4	SCR, SKT HD SHLDR 5.0 DIA X 6.0	23
-	1	-	1	1	-	1	690472-2	STRIPPER	22
-	1	1	1	1	1	1	1-18023-1	SCR, SKT HD CAP M4 X 10.0	21
-	4	4	4	4	4	4	18025-2	WASHER, SPRG LOCK, REG M4	20
-	-	1	-	-	1	-	690472-1	STRIPPER	19
1	-	1	1	1	1	1	1338684-2	SHEAR HOLDER, FRONT	13
-	1	1	1	1	1	1	3-22280-3	SPRING, COMPRESSION	12
-	1	1	1	1	1	1	356885-5	STOP, SHEAR	11
1	-	1	1	-	1	1	1-1320921-0	SHEAR HOLDER, FRONT, CUT	10
1	-	1	1	1	1	1	462006-6	FLOATING SHEAR, FRONT	9
1	1	2	2	2	1	1	2-1633134-3	ANVIL, COMBINATION .110	8
-	1	1	1	1	1	1	240641-5	SPACER	7
-	-	-	-	-	-	-	-	-	6
-	1	1	1	1	1	1	854772-1	DEPRESSOR, SHEAR	5
-	1	1	1	1	1	1	238011-2	BLOCK, CRIMPER SPACER	4
1	2	2	2	1	1	1	1-318903-0	CRIMPER, INSULATION OVERLAP	3
-	1	1	1	1	1	1	455888-1	SPACER, CRIMPER	2
1	2	2	2	1	1	1	456408-3	CRIMPER, WIRE PREMIUM	1
-77	-76	-72	-71	-6	-2	-1	PART NO	DESCRIPTION	ITEM NO

VIEW B ROTATED 180°

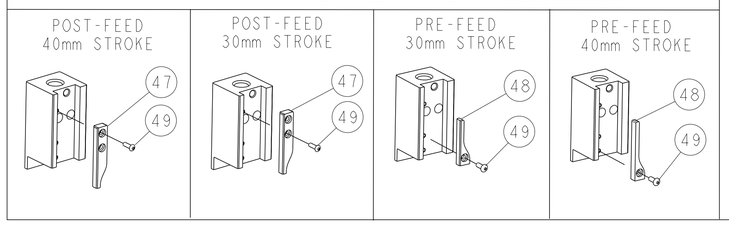

THIS DRAWING IS A CONTROLLED DOCUMENT. DIMENSIONING AND TOLERANCING PER ASME Y14.5M-2009

DIMENSIONS: mm [IN]

TOLERANCES UNLESS OTHERWISE SPECIFIED: 0 PLC ±- 1 PLC ±- 2 PLC ±- 3 PLC ±- 4 PLC ±- ANGLES ±-

MATERIAL - -

FINISH - -

DWN B.HIGMAN 19JAN2009
CHK T.ELBIN 19JAN2009
APVD N.DEMING 19JAN2009

PRODUCT SPEC -

APPLICATION SPEC See Table

WEIGHT -

TE Connectivity

NAME SIDE FEED HDI APPLICATOR - -

SIZE	CAGE CODE	DRAWING NO	RESTRICTED TO
A1	00779	C-1530047	-

CUSTOMER ACCESSIBLE PRODUCTION DRAWING SCALE 3:5 SHEET 1 OF 1 REV B

4805 (3/11)

Pro/ENGINEER DRAWING