SRSTABILIZE

Heavy-Duty Anti-Tip Stabilizing Plate Kit

- Includes front and rear anti-tip stabilizing plates and all the mounting hardware required to fasten the plates to the base of Tripp Lite SmartRack® Enclosures and select Heavy-Duty Open Frame Racks
- Provides extra stability for standalone racks to help prevent tipping
- Plates can be secured to the floor with user-supplied bolts or Tripp Lite's SRBOLTDOWN kit, sold separately
- Cold-rolled steel with black finish

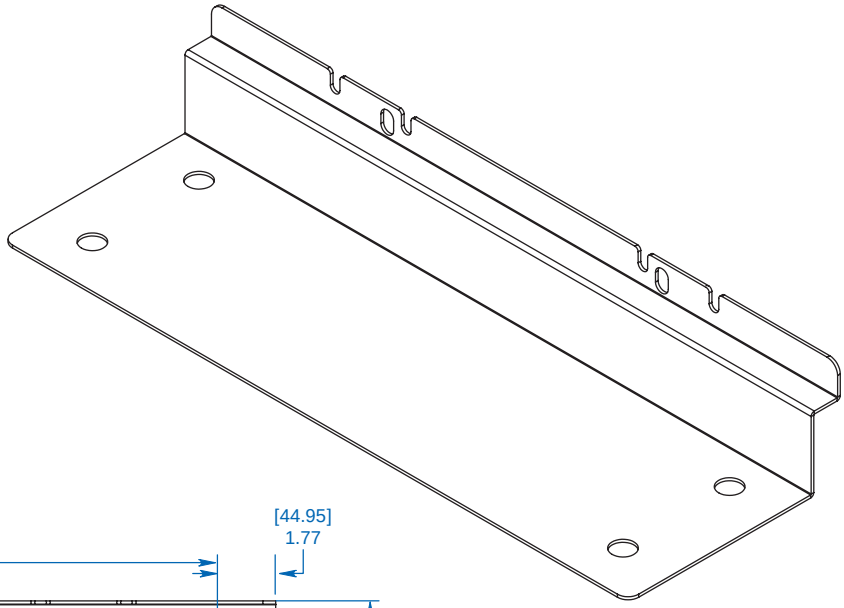

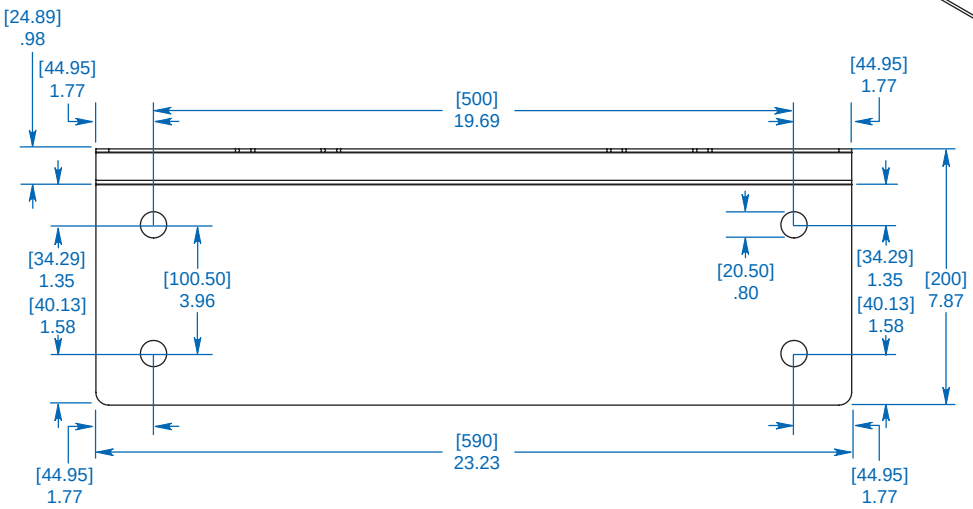

TOP VIEW

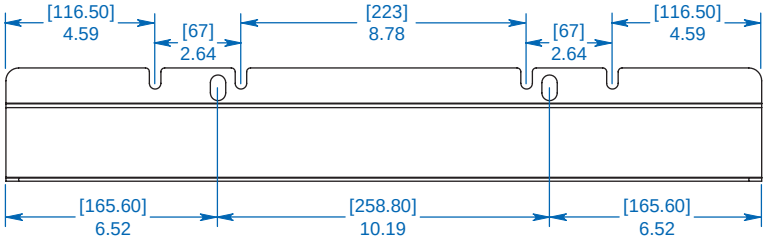

FRONT VIEW

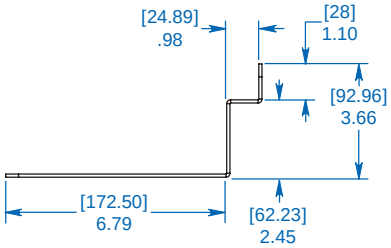

SIDE VIEW

Kit Includes:

Stabilizing Plates (2)

M8 x 12 mm Hex-Head Bolts (4)

M8 Flat Washers (4)

¼"-20 x ½" Hex-Head Bolts (8)

¼" Fender Washers (8)

Dimensions: [mm] INCHES

Tripp Lite has a policy of continuous improvement. Specifications are subject to change without notice.

1111 W. 35th Street
Chicago, IL 60609 USA
773.869.1234
www.tripplite.com

Copyright © 2013 Tripp Lite.

13-03-031