GS _ _ _ _ S _

M GS SERIES CHART 2

BODY CODE	
C	ZINC DIECAST BODY AND HEAD WITH STEEL COVER, BODY AND COVER FINISHED IN RED EPOXY PAINT HEAD FINISHED IN BLACK EPOXY PAINT
D	RED GLASS FILLED POLYESTER HOUSING AND COVER, ZINC DIECAST HEAD FINISHED IN BLACK EPOXY PAINT
E	ZINC DIECAST BODY AND HEAD WITH STEEL COVER, BODY AND COVER FINISHED IN RED EPOXY PAINT, HEAD FINISHED IN BLACK EPOXY PAINT 3 - CONDUIT

CONDUIT THREAD

A

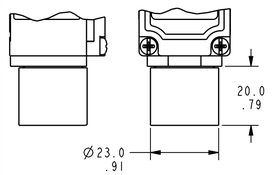

1/2" NPT X 14 CONDUIT THREAD ADAPTER REQUIRED FOR GSD AND GSE PRODUCT

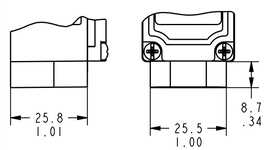

1/2" NPT X 14 CONDUIT THREAD GSA PRODUCT

B PG 13.5 CONDUIT THREAD NO ADAPTER REQUIRED

C

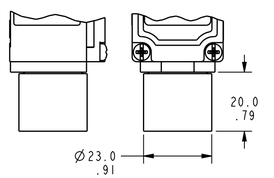

M20 X 1.5 CONDUIT THREAD ADAPTER REQUIRED WITH GSD PRODUCT ONLY

D

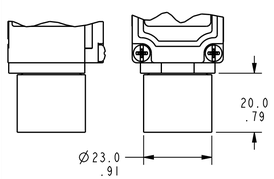

PF 1/2 CONDUIT THREAD ADAPTER REQUIRED WITH GSD PRODUCT ONLY

SWITCH CODE

AVAILABLE IN GSC, GSD, AND GSE

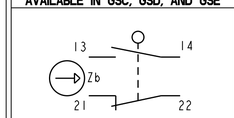

01	SNAP-ACTION CONTACTS
07	SNAP-ACTION CONTACTS (GOLD PLATED CONTACTS)

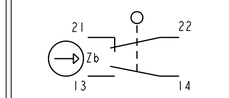

03	SLOW-ACTION CONTACTS (BREAK BEFORE MAKE)
33	SLOW-ACTION CONTACTS (BREAK BEFORE MAKE) (GOLD PLATED CONTACTS)

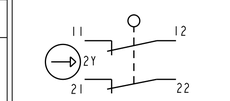

06	SLOW-ACTION CONTACTS (2 NORMALLY CLOSED)
36	SLOW-ACTION CONTACTS (2 NORMALLY CLOSED) (GOLD PLATED CONTACTS)

AVAILABLE IN GSE ONLY

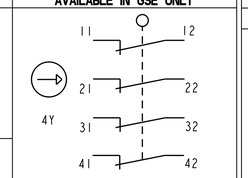

40	SLOW-ACTION CONTACTS (BREAK BEFORE MAKE)
41	SLOW-ACTION CONTACTS (BREAK BEFORE MAKE) (GOLD PLATED CONTACTS)

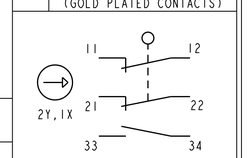

42	SLOW-ACTION CONTACTS (BREAK BEFORE MAKE)
43	SLOW-ACTION CONTACTS (BREAK BEFORE MAKE) (GOLD PLATED CONTACTS)

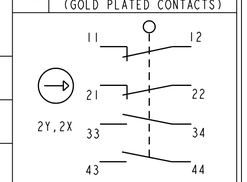

44	SLOW-ACTION CONTACTS (BREAK BEFORE MAKE)
45	SLOW-ACTION CONTACTS (BREAK BEFORE MAKE) (GOLD PLATED CONTACTS)

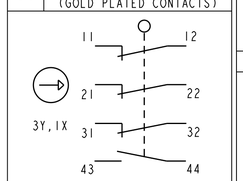

46	SLOW-ACTION CONTACTS (BREAK BEFORE MAKE)
47	SLOW-ACTION CONTACTS (BREAK BEFORE MAKE) (GOLD PLATED CONTACTS)

AVAILABLE IN GSC, GSD, AND GSE

CODE 1 , LEVER TO LEFT

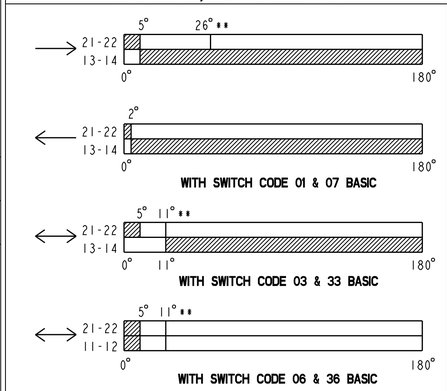

CODE 2 , LEVER TO TOP

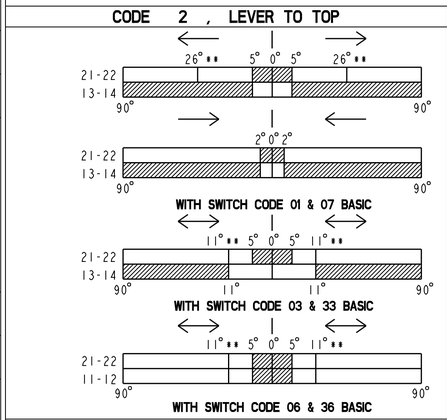

CODE 3 , LEVER TO RIGHT

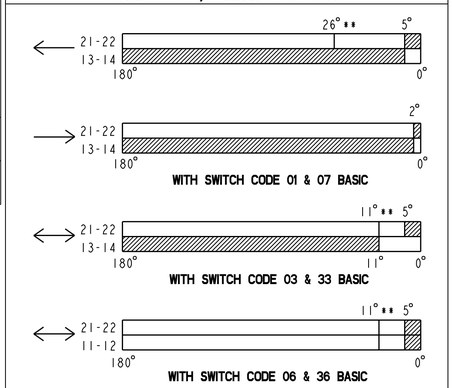

AVAILABLE IN GSE ONLY

CODE 1 , LEVER TO LEFT

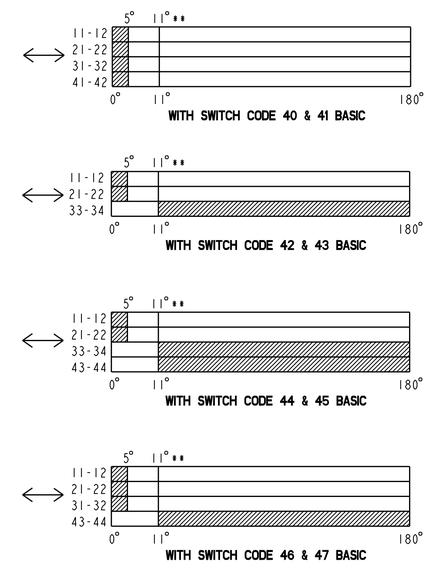

CODE 3 , LEVER TO RIGHT

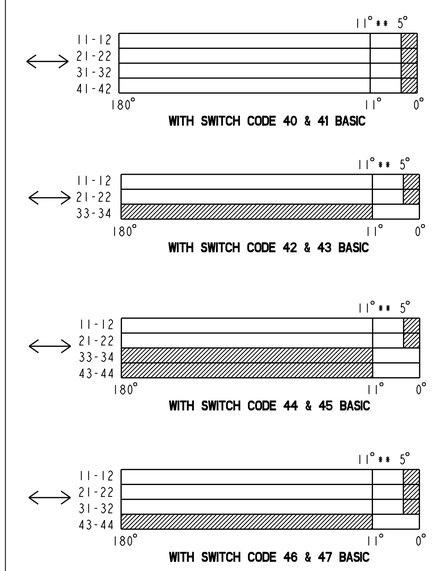

CODE 2 , LEVER TO TOP

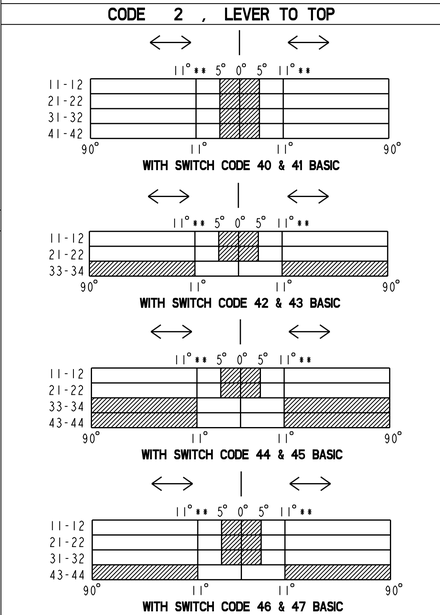

CONTACT CLOSED

CONTACT OPEN

** POSITIVE OPENING TO IEC 947-5-1

NOTES:

1 - MAXIMUM OPERATING TORQUE - ___12_ Nm/ __1.1_ in-lb
MAXIMUM DISCONNECT TORQUE - __16_ Nm/ _1.5_ in-lb

2 MAXIMUM TIGHTENING TORQUE FOR FIXING SCREW -
0.5Nm/4.4in-lb (GSC & GSE PRODUCTS)
0.339Nm/3 in-lb (GSD PRODUCTS)

3 IP66/IP67 NEMA 1,4X(INDOOR USE ONLY),12,13 FOR GSD PRODUCTS

ELECTRICAL RATING - 1th = 10A				ENVIRONMENTAL	APPROVALS
SILVER CONTACTS			GOLD PLATED CONTACTS		
AC FOR SWITCH CODES 01, 07, 03, 33	AC FOR SWITCH CODES 06,36,40,41,42,43,44,45,46,47	DC		IP66 NEMA 1, 4, 12, 13 3	UL
A600 AC15 Ue Ie	A300 AC15 Ue Ie	Q300 DC13 Ue Ie		TEMP RANGE: -40°C TO +85°C -40°F TO +185°F	CSA
VOLTS AMPS 120 6 240 3 380 1.9 480 1.5 500 1.4 600 1.2	VOTLS AMPS 120 6 240 3	VOLTS AMPS 125 0.55 250 0.27	1V 10uA MIN 50V 100mA MAX	STORAGE: -40°C TO +85°C -40°F TO +185°F SHOCK: 50G PER IEC 68-2-27 VIBRATION: 100G PER IEC 68-2-6	IEC 947-5-1 EN50047

REVISIONS			
L	0005762	CMH	09OCT12
M	0022231	DVM	31MAY06
N	0063072	S A V	18OCT99
P	0094515	S A V	18OCT99

ISSUE	DRAWING CHANGE	RELEASE NO.	PAGE	REPLACES
X15	M	PR-24250	1 OF 2	GS SERIES CHART 2

DRAWN S A V 18OCT99 PTC/CAD

THIS DRAWING COVERS A PROPRIETARY ITEM AND IS THE PROPERTY OF MICRO SWITCH. A DIVISION OF HONEYWELL. THIS DRAWING IS NOT TO BE COPIED OR USED WITHOUT THE APPROVAL OF MICRO SWITCH.

FED. MFG. CODE 91929
MICRO SWITCH a Honeywell Division

LIMIT SWITCH

CATALOG LISTING
GS SERIES CHART 2

ANSI Y14.5M-1982 APPLIES

THIRD ANGLE PROJECTION

SCALE FULL

DO NOT SCALE PRINT

TOLERANCES
APPLY TO DESIGN UNITS. CONVERSIONS ARE ONLY FOR REFERENCE. UNLESS NOTED, TOLERANCES ARE ±

	DIM. mm	TOL. mm/in	DIM. in	TOL. mm/in
NO PLACES	X	±1/.04	X.X	0.8/.03
ONE PLACE	X.X	0.4/.016	X.XX	0.38/.015
TWO PLACES	X.XX	0.15/.006	X.XXX	0.13/.005
THREE PLACES				
ANGLES				

DESIGN UNITS SI METRIC [X] US CUSTOMARY [ ]

WEIGHT TBD

BODY CODES C AND D

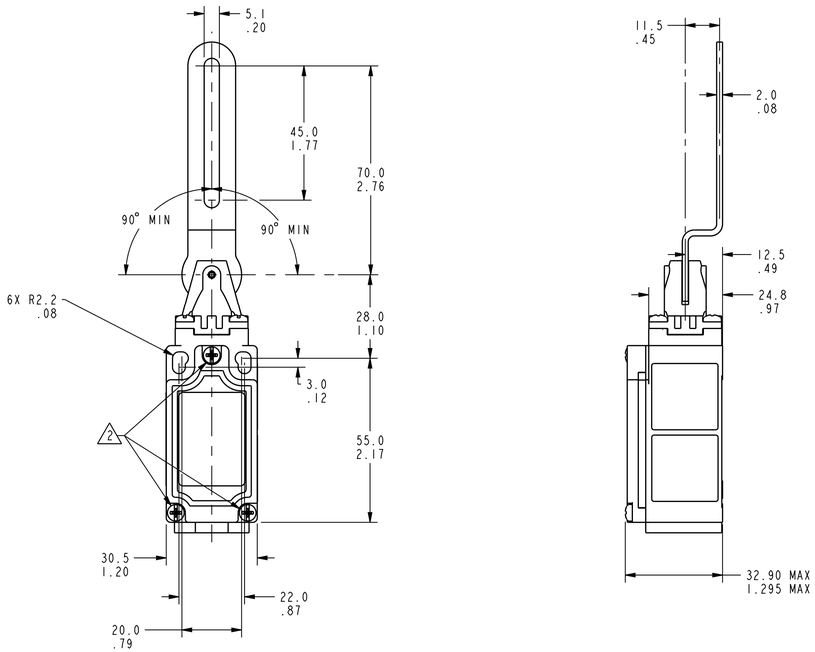

BODY CODE E

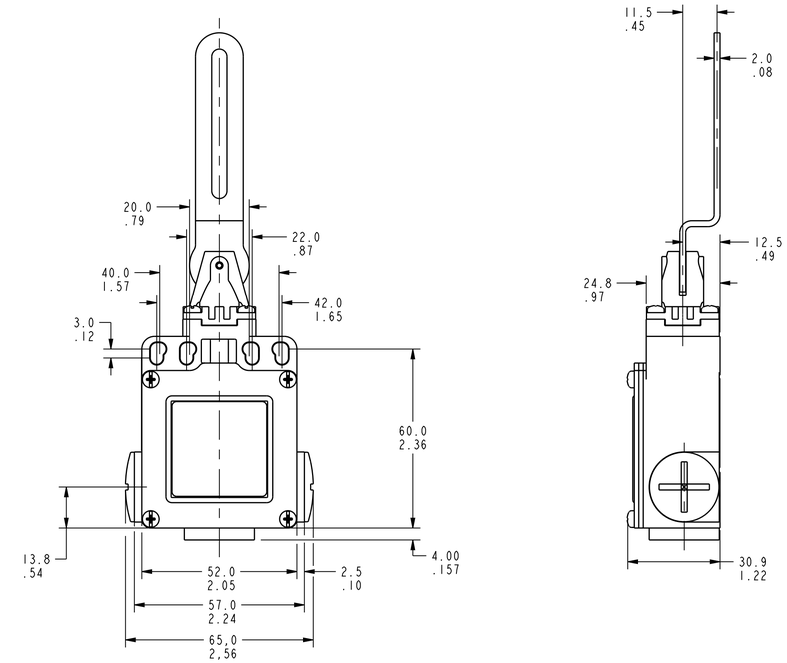

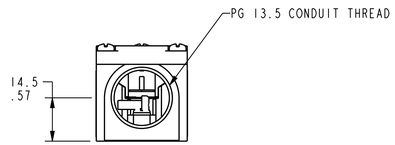

ACTUATOR CODE 2

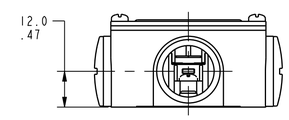

ACTUATOR CODE 2

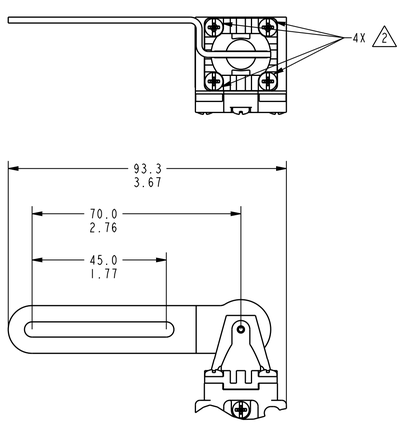

ACTUATOR CODE 1

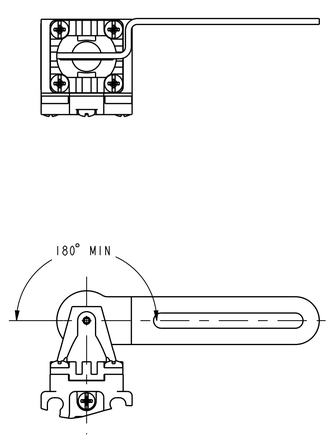

ACTUATOR CODE 3

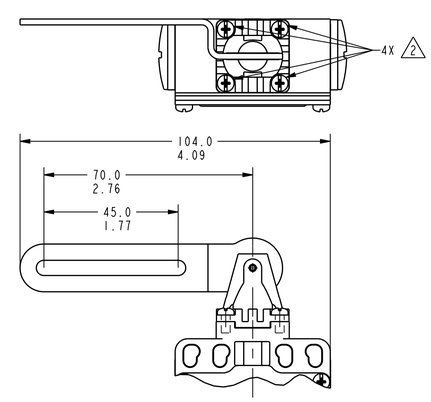

ACTUATOR CODE 1

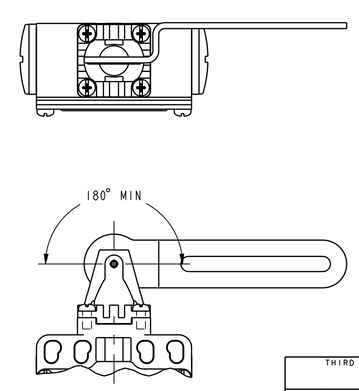

ACTUATOR CODE 3

ANSI Y14.5M-1982 APPLIES

THIS DRAWING COVERS A PROPRIETARY ITEM AND IS THE PROPERTY OF MICRO SWITCH, A DIVISION OF HONEYWELL. THIS DRAWING IS NOT TO BE COPIED OR USED WITHOUT THE APPROVAL OF MICRO SWITCH.

FED. MFG. CODE 91929

MICRO SWITCH a Honeywell Division

LIMIT SWITCH

CATALOG LISTING

GS SERIES CHART 2

THIRD ANGLE PROJECTION

SCALE FULL

DO NOT SCALE PRINT

TOLERANCES

APPLY TO DESIGN UNITS. CONVERSIONS ARE ONLY FOR REFERENCE. UNLESS NOTED, TOLERANCES ARE ±

	DIM mm	TOL mm±x	DIM in	TOL in±x
NO PLACES	X	1/.04	X.X	0.8/.03
ONE PLACE	X.X	0.4/.016	X.XX	0.38/.015
TWO PLACES	X.XX	0.15/.006	X.XXX	0.13/.005
THREE PLACES				
ANGLES				

DESIGN UNITS SI METRIC [X] US CUSTOMARY [ ]

WEIGHT TBD

REVISIONS			
L	0005762	BW 28 MAY 04	
M	0022231	BRA 31MAR06	
N	0063072	ANR 06APR10	
P	0094575	SBH 09OCT12	

ISSUE	DRAWING NO.	RELEASE NO.	PAGE	REPLACES
M	15	PR-24250	2 OF 2	

DRAWN	CHECK	CHECK	CHECK	CHECK	CHECK
P-TC/CAD	S A V 180C199	S A V 180C199	DVM 31MAY06	CMH 090CT12	