DRAWING MADE IN THIRD ANGLE PROJECTION

567438 ⇔ 567438

/home/ampt4958/edmmod

PART NUMBER	REV	FIRST USED
567438-1	C	354500-1
567438-2	C	565435-5

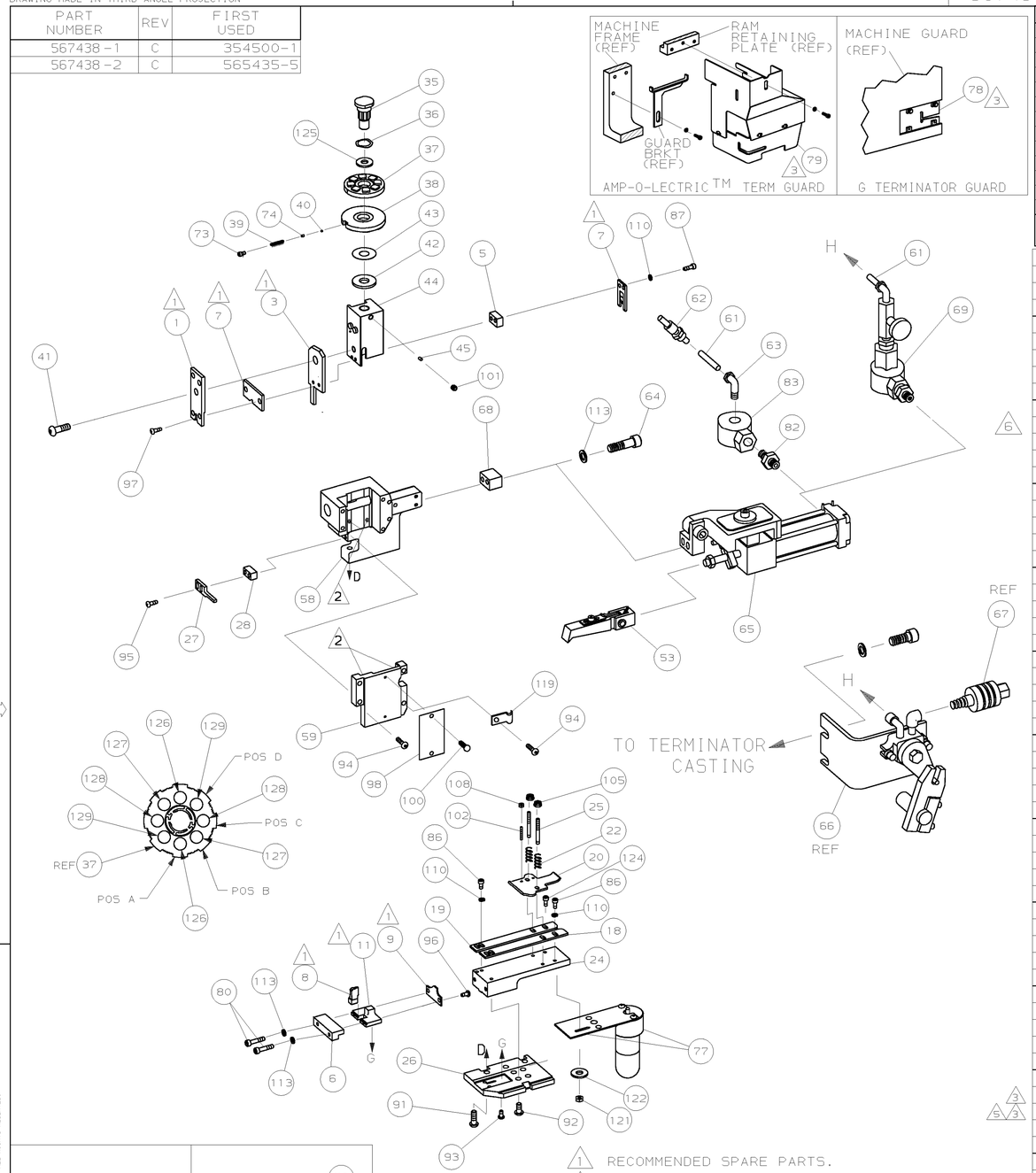

TERMINAL NAME: .187 AMPLIVAR™FASTIN FASTON™TAB

TAB FED FIRST

62445-1
62445-2

CRIMPING DATA

PAD LTR	CRIMP HEIGHT	WIRE SIZE
A	.089 ±.002 [2.26 ±0.05mm]	12 Cu
B	.083 ±.002 [2.11 ±0.05mm]	13 Cu OR (2)16 AL
C	.079 ±.002 [2.01 ±0.05mm]	14 Cu OR (2)17 AL
D	.074 ±.002 [1.88 ±0.05mm]	15 Cu OR (2)18 Cu

CRIMP	SIZE	TYPE	RANGE
WIRE	.140 [3.56mm]	F	18-12 MAG WIRE
INSUL	-	-	-

WIRE STRIP LENGTH	TERM APPL SPEC	FEED	APPL INSTRUCTION	SET UP GAGE	LAYOUT
-	-	1.065		458638-1	L1441

								70
4	.	1	-	-	C	692655-5	AIR FEED VALVE ASSY	69
	.	1	1	-	A	461690-2	SPACER, AIR FEED	68
	.	REF	-	-	A	24042-2	VALVE, SHUT OFF	67
4	.	REF	-	-	C	692655-6	AIR FEED VALVE ASSY	66
4	.	1	1	-	B	460277-2	AIR FEED ASSY	65
	.	2	2	-	A	4-21000-3	SCR,SHC(10-32x2.00)AIR ASSY	64
	.	-	1	-	A	980285-2	ELBOW, SWIVEL 1/8 NPT-1/4 T	63
	.	-	1	-	A	23238-1	QUICK DISCONNECT	62
	.	12.00	12.00	IN	A	27319-4	TUBING, POLY-FLO ø.25	61
								60
	.	1	1	-	C	454220-1	CAP, RAM	59
	.	1	1	-	D	453736-1	HOUSING	58
								57
								56
								55
								54
4	.	1	1	-	B	460680-1	FEED FINGER ASSY	53
								52
								51
								50
								49
								48
								47
								46
	.	1	1	-	A	690191-1	PLUG, NYLON	45
	.	1	1	-	C	459586-1	RAM	44
	.	1	1	-	A	690125-1	WASHER, LAMINATED	43
	.	1	1	-	A	690124-9	WASHER, RAM	42
	.	1	1	-	A	7-21002-9	BOLT, CRIMPER(5/16-24x1.00)	41
	.	1	1	-	A	23241-6	BALL, STEEL	40
	.	1	1	-	A	690170-1	SPRING, COMPRESSION	39
	.	1	1	.	C	690223-1	DISC, SPACER	38
	.	1	1	-	D	354777-1	WIRE DISC, PLASTIC	37
	.	1	1	-	A	22480-5	WASHER, SPRING	36
	.	1	1	-	B	690212-1	POST, RAM	35
								34
								33
								32
								31
								30
								29
	.	1	1	-	B	3-690451-4	SPACER, STRIPPER	28
	.	1	1	-	A	460276-1	STRIPPER	27
	.	1	1	-	D	459584-1	PLATE, BASE	26
	.	2	2	-	A	22354-8	DRAG, STUD	25
	.	1	1	-	B	462931-2	PLATE, STRIP GUIDE	24
								23
	.	2	2	-	A	4-22281-1	SPRING, DRAG	22
								21
	.	1	1	-	A	454177-1	DRAG, STOCK	20
	.	1	1	-	B	90441-1	GUIDE, STRIP (REAR)	19
	.	1	1	-	C	90442-1	GUIDE, STRIP (FRONT)	18
								17
								16
								15
								14
								13
								12
1	.	1	1	-	B	90439-1	BODY, ANVIL	11
								10
1	.	1	1	-	B	90440-1	PLATE GUIDE, RETAINING	9
1	.	1	1	-	D	90438-1	ANVIL	8
1	.	1	1	-	B	459581-5	BLADE, SLUG	7
	.	1	1	-	D	459580-1	PLATE, RETAINING	6
								5
								4
	.	1	1	-	C	459587-1	GUIDE, CRIMPER	3
								2
1	.	1	1	-	C	459585-7	CRIMPER, WIRE	1
	.	-2	-1	U/M	DWG SIZE	PART NO	DESCRIPTION	ITEM NO

-1	BENCH MODEL G	AIRFEED	
-2	BENCH MODEL K	AIRFEED	

	.	2	2	-	C	3-354779-0	PIN, WIRE DISC (.3140)D	129
	.	2	2	-	C	1-354779-6	PIN, WIRE DISC (.3070)C	128
	.	2	2	-	C	1-354779-0	PIN, WIRE DISC (.3040)B	127
	.	2	2	-	C	9-354778-5	PIN, WIRE DISC (.2970)A	126
	.	1	1	-	A	986950-1	WASHER, FLAT PRECISION	125
	.	1	1	-	A	2-21000-9	SCR,SHC(8-32x.75)ST GU	124
								123
	.	1	1	-	A	21055-6	WASHER,FLAT (NO.8)LUBE	122
	.	1	1	-	A	21018-6	NUT,HEX (NO.8)LUBE	121
								120
6	.	1	1	-	A	986220-9	CLAMP, WIRE	119
								118
								117
								116
								115
								114
	.	2	2	-	A	21024-3	WASHER,LOCK(NO.6)SHEAR PL	113
								112
								111
	.	6	6	-	A	21024-4	WASHER,LOCK(NO.8)SHEAR BL	110
								109
	.	2	2	-	A	21018-4	NUT,HEX(4-40)DRAG	108
								107
								106
	.	2	2	-	A	21022-2	NUT,HEX SL(8-32)DRAG STUD	105
								104
	.							103
	.	2	2	-	A	2-21006-6	SCR,SKT SET(4-40x.62)DRAG	102
	.	1	1	-	A	21009-2	SCR,SKT SET(1/4-20x.25)RAM	101
	.	2	2	-	A	21017-2	SCR,DRIVE(#2x.19)ID PLATE	100
								99
	.	1	1	-	B	461264-1	PLATE, IDENTIFICATION	98
	.	2	2	-	A	2-21002-9	SCR,BHC(10-32x.75)SLUG BLADE	97
	.	2	2	-	A	1-21002-6	SCR,BHC(6-32X.25)RET PL	96
	.	2	2	-	A	8-21002-9	SCR,BHC(8-32X1.00)STRIPPER	95
	.	4	4	-	A	2-21002-9	SCR,BHC(10-32x.75)CAP	94
	.	2	2	-	A	2-22733-0	SCR,BHC(10-32x.38 LW)ANVIL	93
	.	4	4	-	A	3-21002-5	SCR,BHC(1/4-20x.75)ST GD PL	92
	.	3	3	-	A	2-22733-8	SCR,BHC(1/4-20x.62)HSG	91
	-	1	-	-	A	22317-3	ELBOW,METAL T .25T-1/8 NPT	90
	.	1	-	-	B	689446-2	AIR BLAST TUBE	89
	.	1	-	-	C	455350-1	AIR BLAST ASSEMBLY	88
								87
	.	3	3	-	A	2-21000-6	SCR,SHC(8-32x.38)STRIP GUIDE	86
								85
		-	1	-	B	318848-1	AIR BLAST ASSY	84
		-	1	-	B	22374-7	QUICK EXH	83
		-	1	-	B	22304-1	NIPPLE, HEX 1/8 NPT	82
								81
	.	2	2	-	A	2-21000-0	SCR,SHC(6-32x.50)SH PL	80
3	.	1	-	-	A	455750-8	GUARD ASSY	79
5 3	.	-	REF	-	A	679532-1	INSERT, GUARD	78
	.	1	-	-	C	1-465184-7	LUBRICATOR ASSY	77
								76
								75
	.	1	1	-	A	690603-1	SPRING, ASSIST	74
	.	1	1	-	A	23030-1	SCR,SKT CAP(6-32x.25)CP DSC	73
								72
								71
	.	-2	-1	U/M	DWG SIZE	PART NO	DESCRIPTION	ITEM NO

QTY REQD PER ASSY — PARTS LIST

REVISION OF EACH ASSY NO (WHEN BLANK, USE DWG REVISION)

QTY REQD PER ASSY — PARTS LIST

1. RECOMMENDED SPARE PARTS.
2. GREASE LIGHTLY.
3. GUARD MUST BE IN PLACE WHEN OPERATING APPLICATOR IN A BENCH MACHINE.
4. SEE DRAWING FOR COMPONENTS
5. USED FOR BENCH MODEL G ONLY.
6. USE ITEM 119 TO SECURE ITEM 89 TO ITEM 59. ATTACH USING ITEM 94.

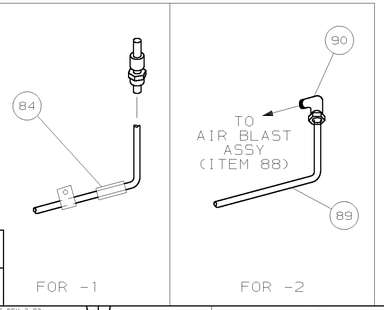

P	F	LTR	REVISION RECORD	APP	DATE
		C	0150-0716-00	TE	10-00
		B	0150-9412-99	TE	JUL99
		A	REVISED	CE	4/95

DIMENSIONS IN INCHES. DO NOT SCALE PRINT. TOLERANCES UNLESS OTHERWISE SPECIFIED: 2 PLC DEC ±.25 3 PLC DEC ±- 4 PLC DEC ±- ANGLES ± - SURF TEXTURE: √ REMOVE BURRS, BREAK SHARP EDGES R.015 MAX

MATL - HT TR - FIN -

DR M.OBRINE 2/16/95 APP S. FERRANTI 2-16-95
CHK C. ERISMAN 2-16-95 REL B. MORGAN 5/22/95

AMP Incorporated Harrisburg, PA 17105-3608

NAME END FEED HDM APPLICATOR — MACHINE REF MINI APPL

SCALE - — D — DWG NO 567438 — SHEET 1 OF 1 — REV C

CAGE CODE 00779 — CUSTOMER AND ASSEMBLY DRAWING — RESTRICTED TO

THIS DRAWING IS A CONTROLLED DOCUMENT.
THIS DRAWING IS UNPUBLISHED. © COPYRIGHT 19 . BY AMP INCORPORATED. ALL RIGHTS RESERVED. RELEASED FOR PUBLICATION: 19

LOC A — DIST 66

AMP 1756 REV 3-92

17-OCT-00 14:17:37 ampt4958